Journal of Bionic Engineering (2024) 21:607–634
https://doi.org/10.1007/s42235-023-00468-1

REVIEW ARTICLE

Development of Wheel-Legged Biped Robots: A Review

Xuefei Liu[1] · Yi Sun[1] · Shikun Wen[1] · Kai Cao[1] · Qian Qi[1] · Xiaoshu Zhang[1] · Huan Shen[1] · Guangming Chen[1] · Jiajun Xu[1] · Aihong Ji[1,2]

Received: 7 August 2023 / Revised: 9 December 2023 / Accepted: 12 December 2023 / Published online: 27 February 2024
© Jilin University 2024

Abstract
The wheel-legged biped robot is a typical ground-based mobile robot that can combine the high velocity and high efficiency pertaining to wheeled motion and the strong, obstacle-crossing performance associated with legged motion. These robots have gradually exhibited satisfactory application potential in various harsh scenarios such as rubble rescue, military operations, and wilderness exploration. Wheel-legged biped robots are divided into four categories according to the open–close chain structure forms and operation task modes, and the latest technology research status is summarized in this paper. The hardware control system, control method, and application are analyzed, and the dynamic balance control for the two-wheel, biomimetic jumping control for the legs and whole-body control for integrating the wheels and legs are analyzed. In summary, it is observed that the current research exhibits problems, such as the insufficient application of novel materials and a rigid–flexible coupling design; the limited application of the advanced, intelligent control methods; the inadequate understanding of the bionic jumping mechanisms in robot legs; and the insufficient coordination ability of the multi-modal motion, which do not exhibit practical application for the wheel-legged biped robots. Finally, this study discusses the key research directions and development trends for the wheel-legged biped robots.

Keywords Wheel-legged biped robot · Wheeled motion · Legged motion · Control strategy

1 Introduction

The invention and application of the wheel are determined by the ability of humans to understand, transform, and adapt to nature, which immensely promotes the development of the social productive forces and the progress of social civilizations. Compared with mobile robots that utilize motions such as walking [1, 2], crawler-type crawling [3], and legged crawling [4, 5], the wheeled robots that rely on wheels can reduce their own motion shocks through rolling contact and exhibit advantages such as high efficiency, stability, and flexibility [6]. Due to their excellent mobility, they are quite suitable for long-distance motion, and they have been widely utilized in activities such as goods transportation, environmental exploration, and disaster relief [7]. However, due to the simple wheeled motion mode, its obstacle-crossing ability is relatively limited, and it is disadvantageous in unstructured environments [8]. The advantages and disadvantages of legged robots are exactly opposite to those of wheeled robots. The legged robots exhibit a strong terrain adaptability, compound motion mode, and autonomous passage ability in unknown and unstructured environments [9]. Some bipedal bionic jumping robots that mimic biological organisms exhibit enhanced obstacle-crossing performance [10]; however, the motion state of the legged robots is discrete rather than continuous [11]. Their mobile efficiency is average, and their energy consumption is large [12]. Due to this limitation, in recent years, researchers have integrated the advantages of the wheeled robots and legged robots; thus, they have designed the wheel-legged hybrid mobile robots, which can achieve multi-modal motion effects, combining the advantages of fast and smooth motion on flat terrains with the ability to dynamically traverse environmental obstacles. This technology has been gradually applied in

✉ Aihong Ji
meeahji@nuaa.edu.cn

1 Lab of Locomotion Bioinspiration and Intelligent Robots, College of Mechanical and Electrical Engineering, Nanjing University of Aeronautics and Astronautics, 29 Yudao Street, Nanjing 210016, China

2 State Key Laboratory of Mechanics and Control for Aerospace Structures, Nanjing University of Aeronautics and Astronautics, Nanjing 210016, China

scenarios such as wilderness exploration, disaster area rescue, military operations, and goods transportation [13, 14].

The wheel-legged biped robot is a typical wheel-legged mobile robot with a relatively simple mechanical control system and lower energy consumption. It possesses dual-driven wheels as the contact points with the ground (similar to elements of a two-wheeled mobile robot), and the wheels are connected to the robot body's floating base through leg linkages (similar to elements of a biped robot). Typically, the robot exhibits bilateral symmetry in its structure and distribution of degrees of freedom. This wheel-legged combination architecture possesses an innovative and terrain-adaptive motion mode, which enables the robots to efficiently perform tasks in both structured and unstructured environments [15]. Consequently, it has become one of the most crucial research fields in robotics innovation. The wheel-legged biped robots mainly achieve wheeled motion on flat terrains through the dynamic self-balancing rolling of the two wheels, and obstacle crossing movement in unstructured environments is achieved through legged biomimetic jumping [13]. Quite a few wheel-legged biped robots can challenge bipedal walking [16, 17] (similar to the humanoid robot walking mode) and upper limb coordination operations (i.e., grasping, sorting, and handling operations, which require additional degrees of freedom in the upper body) [18, 19]. However, these modes are not primary strengths for the wheel-legged biped robots. Due to the technological breakthroughs and practical applications pertaining to robots (i.e., wheeled mobile robots, humanoid robots, quadruped robots, and bionic robots) in recent years, research and development on the wheel-legged biped robots are exhibiting novel vitality. These research fields have exhibited numerous achievements pertaining to both the mechanical structure design and the development of the control systems; technologies such as the Handle robot [20], ETH Ascento [13], SUSTech NeZha [21], and Tencent Robotics X robot Ollie [22] excellently represent the development of the wheel-legged biped robots in recent years, which demonstrates impressive motion capabilities. Thus, wheel-legged biped robots have attracted immense research interest worldwide.

Mechanical structure is one of the important components of wheel-legged biped robot, which determines the motion accuracy, dynamics characteristics, and motion mode of the robot. Some robots with reasonable configuration design and high degree of lightweight material show obvious advantages in multi-mode motion performance. The mechanical structure of the wheel-legged biped robots mainly includes the upper body structure, the linkage mechanism of the legs, and the driving wheel structure in contact with the ground [23]. The upper body structure is equipped with the joint motors that drive the linkage mechanism of the legs. The driving wheels are installed with the output shafts of the wheel motors. The joint motors and the wheel motors cooperate to realize the multi-mode motion of the wheel-legged biped robots. To better study wheel-legged biped robots, they are classified according to the criteria of whether the mechanical structure of the single leg is open or not. They can be divided into single-legged open-chain wheel-legged biped robots and single-legged closed-chain wheel-legged biped robots [22, 24]. Single-legged open-chain wheel-legged biped robots can be further categorized into humanoid open-chain wheel-legged biped robots and lower limb open-chain wheel-legged biped robots, whereas single-legged closed-chain wheel-legged biped robots can be divided into single-legged partially closed-chain wheel-legged biped robots and single-legged fully closed-chain wheel-legged biped robots.

As an unactuated, nonlinear, and complex controlled system with wheel–leg coupling [25], the wheel-legged biped robots can realize rapid wheeled motion on flat region, bionic jumping motion, and integrated motion of legs and wheels, and other motion types, which need to complete control tasks such as dynamic balance control for two-wheel configurations, the bionic jumping control for legs, and the whole-body control (WBC) for the wheels and legs in an unstructured environment. To develop a complex motion control strategy for wheel-legged biped robots, the following control methods are proposed: from the general simplified model to the complete dynamic model, from instantaneous control to predictive control, and from trajectory optimization to various intelligent learning control techniques [26]. The representative control algorithms include spring-loaded inverted pendulum (SLIP) model control, wheeled spring-loaded inverted pendulum (W-SLIP) model control, and virtual model control (VMC), which are based on the simplified model; model predictive control (MPC) and linear quadratic regulator (LQR) control, which are based on the complete dynamic model; and reinforcement learning (RL), deep reinforcement learning control, and central pattern generation (CPG) control, which are based on biological neural mechanisms. In the future, more intelligent control methods will be applied to wheel-legged biped robots, especially the popular adaptive neural network learning control and embodied learning control in recent years, which will be further integrated with other control algorithms to achieve the classification control effect under the multi-algorithm fusion mode.

Wheel-legged biped robot has a high degree of leg–wheel mechanism fusion, and has the advantages of efficient and fast motion of wheeled robot on flat terrain and high energy utilization efficiency, which is suitable for long distance and fast motion on a structured environment. In the face of unstructured complex environment, obstacles on the road can be crossed by bionic jumping over obstacles, which expands the range of activities of the robot on the ground, makes up for the shortcomings of the traditional wheeled

robot with poor obstacle crossing performance, and has the discreteness and obstacle crossing similar to the bionic jumping robots [27, 28]. However, the wheel-legged biped robot is more complicated to switch between different motion modes, and the telescopic motion of the leg mechanism has a certain impact on the stability and equilibrium property. The smoothness of the motion is not as good as the traditional wheeled robot, but it is better than the common biped robot (humanoid robot) [29]. The mechanical structure and control strategy of the wheeled-legged biped robots will be discussed in detail in the following sections.

The reminder of this paper is organized as follows. The classification and research status of the wheel-legged biped robots are introduced in Sect. 2, and four categories are considered: humanoid open-chain wheel-legged biped robots, lower limb open-chain wheel-legged biped robots, single-legged partially closed-chain wheel-legged biped robots, and single-legged fully closed-chain wheel-legged biped robots; thus, the research status is analyzed as per the classification. In Sect. 3, the control strategies of the wheel-legged biped robots are illustrated, including the dynamic, two-wheel balance control, the bionic jumping control for legs, and the WBC for integrating the wheels and legs. In Sect. 4, the issues and challenges pertaining to the wheel-legged biped robots are summarized, and the future development prospects are discussed. Finally, the conclusions are summarized in Sect. 5.

2 Mechanical Structure of the Wheel-Legged Biped Robots

According to the structure fusion characteristic between wheels and legs, the robots can be divided into leg–wheel fusion category and independent leg–wheel category [30]. In the leg–wheel fusion category, only wheels (i.e., moving components of the robot) are in contact with the ground, and the leg linkages do not make any contact with the ground. In this design, the wheels are added at the legs to facilitate high-velocity motion, and the body's center of gravity can be raised or lowered through the extension and contraction of the legs. In the independent leg–wheel category, the wheels and the leg linkages of the robot are in contact with the ground simultaneously. The wheels and leg linkages cooperate to achieve body balance, which enables the robot to move forward on the ground and overcome obstacles in the unstructured environment. However, the control system is relatively complex, and it is difficult to realize the legs–wheels coordination. The wheel-legged biped robots analyzed herein refers to the first category, namely the leg–wheel fusion category (the second category belongs to the multi-wheeled hybrid robots, which does not belong to the specific research category outlined herein). As a typical representative of wheel-legged robots, the wheel-legged biped robot has achieved a series of crucial research results in both the technology and products domain. The following section introduces the wheel-legged biped robots according to the mechanical structure and expounds its research status in detail.

2.1 Single-Legged Open-Chain Wheel-Legged Biped Robots

With the waist and torso as the floating base, the single-legged open-chain wheel-legged biped robots can simultaneously extend a number of twin-like series mechanisms down and up, forming a structure similar to human limbs. The overall shape is similar to the humanoid robot structure (the humanoid robot lower limbs are replaced with two driving wheels). Alternatively, the single-legged open-chain wheel-legged biped robots can also utilize the waist trunk as a floating base and extend downward to form a structure similar to the human lower limbs. These two categories of single-legged open-chain wheel-legged biped robots are, respectively, referred to as humanoid open-chain wheel-legged biped robots and lower limb open-chain wheel-legged biped robots. Section 2.1 provides a detailed introduction to these two categories of wheel-legged biped robots.

2.1.1 Humanoid Open-Chain Wheel-Legged Biped Robots

The humanoid open-chain wheel-legged biped robots are the most complex mechanical structure and control system of the wheel-legged biped robots; they are similar to a composite robot that combines a humanoid robot and two-wheeled balance robot, and they can complete a wide variety of tasks; thus, they have attracted immense research interest in recent years. The Boston Dynamics humanoid robot Atlas [31] (Fig. 1a) considerably influences the design of this class of robots. As depicted in Fig. 1b, Boston Dynamics debuted Handle robot [20], a wheel-legged biped robot. The first version of the Handle upper limb mechanism was driven by the hydraulic system, and the wheels were driven by the motor system. The video indicated the two-wheel balancing movement and the robot's ability to jump forward and up simultaneously. The whole motion process is exceedingly stable, free, and flexible. However, this robot cannot grasp objects, neither can it lift its upper limbs, which are utilized only to maintain the balance of the body. Subsequently, the second version of the Handle robots [18] was compared with the first edition robot. In the second version, the Handle robot changes its hands into a single arm structure with a final suction cup gripper and holds the goods by the front suction cup to complete the handling work smoothly; thus, it can be utilized as a mobile logistics storage and handling robot

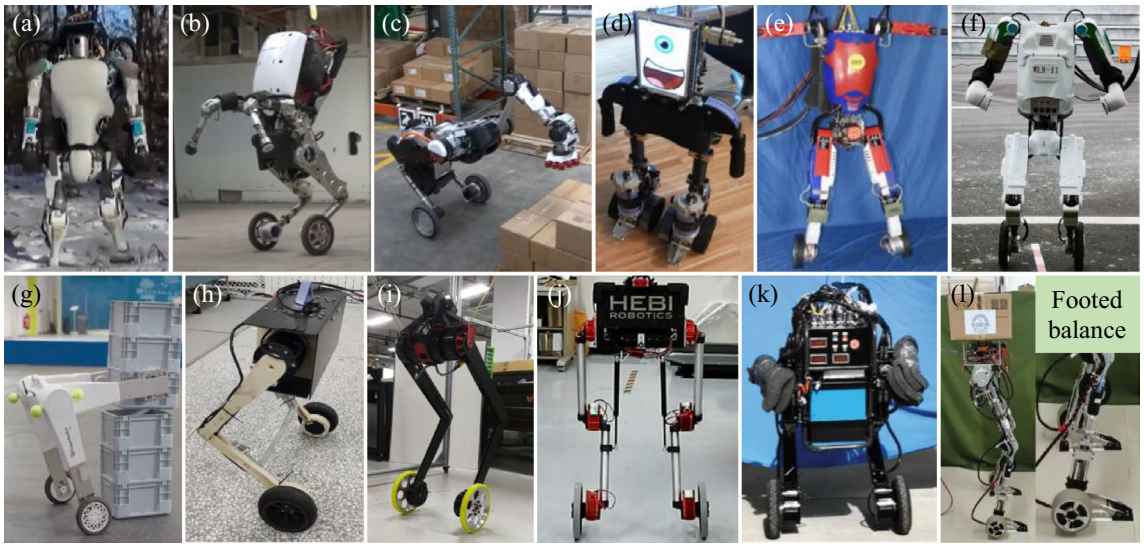

Fig. 1 Single-legged open-chain wheel-legged biped robots. **a** Atlas, Ref. [31]. **b** First version Handle robot, Ref. [20]. **c** Second version Handle robot, Ref. [18]. **d** ROLLO, Ref. [32]. **e** WLR, Ref. [33]. **f** WLR-II, Ref. [19]. **g** evoBOT, Ref. [35]. **h** HIT robot, Ref. [36]. **i** SUSTech NeZha, Ref. [21]. **j** 6-DOF wheel-legged biped robot, Ref. [14]. **k** Scooter, Ref. [37]. **l** SR600-II, Ref. [17]

(Fig. 1c). The two aforementioned Handle robots, which represent the forerunners of humanoid open-chain wheel-legged biped robots, have attracted immense research attention. As illustrated in Fig. 1d, Muscolo et al. [32] proposed a flexible wheel-legged biped robot ROLLO, which innovatively utilizes the human motion biomechanical analysis as a reference system and continuously narrows the robot–human system gap using a flexible joint design; therefore, the final motion state of the robot constantly approximates that of human beings. As depicted in Fig. 1e, researchers from Harbin Institute of Technology replaced the bipedal structure of the humanoid robot with a two-wheel structure, and they developed a multi-modal wheel-legged hybrid robot WLR [33], which adopted a novel hydraulic drive humanoid structure design. In addition, the aforementioned researchers also designed an enhanced version of the hoseless robot WLR-II [19], as depicted in Fig. 1f. The new version of the robot can eliminate the limitations pertaining to connection, and both robots can achieve movement on complex roads, squat, and load forward. BHR-W [34], a similar robot, is an electric wheel-legged humanoid robot with 14 degrees of freedom, and it can realize complex movements (e.g., walking, jumping, and rolling), with a maximum indoor rolling velocity of 10 km/h. In addition to several classic humanoid structures, Germany's Fraunhofer Institute also launched a dynamic logistics stable equilibrium handling robot evoBOT [35]. The robot structure design follows the characteristics of the humanoid open-chain wheel-legged biped robot; however, it immensely simplifies the upper limb structure design. evoBOT, which is highly agile and flexible, can be utilized for activities such as cargo handling, cruise monitoring, and human assistance, and it is potentially an effective human-life assistant (Fig. 1g).

This type of wheel-legged biped robot exhibits a high degree of integration with humanoid robot technology; the number pertaining to degrees of freedom of the whole robot is higher, and the mechanical structure and hardware control system are more complicated. However, there are many more categories of tasks that robots can accomplish. Its upper limbs (or suction cups) can collaboratively achieve tasks such as grasping, stacking, and handling. The lower limbs, in coordination with the wheels, facilitate dynamic balance motion and the completion of tasks involving overcoming obstacles on unstructured surfaces.

2.1.2 Lower Limb Open-Chain Wheel-Legged Biped Robots

The lower limb open-chain wheel-legged biped robot achieves the bending motion of the thigh and shank by controlling the hip joint motor and knee joint motor, while also completing the adjustment of the robot's body height. It is more suitable for applications such as interstellar exploration, field surveys, military operations, and disaster relief scenarios. In recent years, the lower limb open-chain wheel-legged biped robots have developed rapidly, ushering in a new stage of technological breakthrough. As depicted in Fig. 1h, the wheel-legged biped robot designed by Ji [36] of Harbin Institute of Technology (HIT) exhibits three degrees of freedom on each leg; both hip and knee joints can swing forward, and the driving wheel can roll forward. However, the robot possesses no radar and vision sensing system, and

its ability to adapt to complex terrain is limited. As illustrated in Fig. 1i, SUSTech NeZha [21] is a wheel-legged biped robot with an appearance similar to the lower limb structure of the human body, with a standing height of about 0.89 m and an overall mass of 12.7 kg. As illustrated in Fig. 1j, the research object of the existing literature [14] is the development of a 6-DOF wheel-legged biped robot. The author, who the adverse effects occasioned by the inaccuracy of modeling parameters, designs a robust motion controller with feedforward and feedback capabilities; the motion controller exhibits advantages in trajectory tracking and resisting external perturbance. The combination of the direct drive motor and hydraulic drive system has been increasingly recognized. The 6-DOF robot Scooter with a series structure of lower limbs designed by Cui et al. [37], as depicted in Fig. 1k, adopts hydraulic brake to drive the hip and knee joints of the left and right legs and adopts direct drive motor to drive and control the left and right wheels. The total weight of the robot is 80 kg, which can optimally achieve the height change and velocity tracking effects; however, the robot's trunk pitch angle changes quite considerably. In addition to the aforementioned robots, SR600-II [17] realizes the conversion action between the robot's foot to wheel and wheel to foot motion and can also independently complete wheeled motion and legged motion. The range of achievable motion functions of the lower limb open-chain wheel-legged biped robot is expanded as per Fig. 1.

The single-legged open-chain wheel-legged biped robots theoretically exhibit a wide range of achievable motion modes and task categories. This biped robot most closely resembles human appearance and motion capabilities. By utilizing the two-wheel configuration for high-velocity and efficient rolling instead of the energy-inefficient bipedal walking associated with humanoid robots, the single-legged open-chain wheel-legged biped robot exhibits immense research prospects and application potential in complex external environments. However, due to its relatively high center of gravity, large size, and mass, it exhibits poor obstacle-crossing performance in unstructured environments. Thus, the single-legged closed-chain wheel-legged biped robots are crucial.

2.2 Single-Legged Closed-Chain Wheel-Legged Biped Robots

In addition to the single-legged open-chain wheel-legged biped robots, the closed-chain wheel-legged biped robots have attracted increasing research attention. Typical examples include single-legged partially closed-chain wheel-legged biped robots and single-legged fully closed-chain wheel-legged biped robots; thus, the research field of the wheel-legged biped robots is expanded. The following analysis focuses on the classical single-legged partially closed-chain wheel-legged biped robots, primarily based on four-bar closed-chain structures, and on the single-legged fully closed-chain wheel-legged biped robots, primarily based on five-bar closed-chain structures.

2.2.1 Single-Legged Partially Closed-Chain Wheel-Legged Biped Robots

Single-leg partially closed-chain wheel-legged biped robots typically possess symmetrically distributed motors on the left and right sides, and each end of the leg is equipped with a driving wheel. This category of robot research is relatively mature. For example, as depicted in Fig. 2a, Zhang et al. [24] combined the double driving wheels with the human lower limb structure and designed a 6-DOF single-legged partially closed-chain wheel-legged biped robot referred to as SR600. The robot consists of a torso, two thighs, and two shanks with wheels: five parts in total. Each thigh contains a four-bar driving mechanism. As illustrated in Fig. 2b, Cassie [38] is a two-legged wheeled robot with end-mounted hover shoes. It utilizes an integrated sensor system to achieve autonomous navigation in an environment with obstacles and can perform various complex movements. However, without hover shoes, it becomes a classic biped robot with a structurally variable motion modal. Another category of smaller single-legged partially closed-chain wheel-legged biped robots has also attracted considerable research interest. For example, the robot Ascento designed by ETH [13], as depicted in Fig. 2c, possesses two hip joint motors referred to as ANYbotics ANYdrive in the torso for limb extension and retraction; thus, it achieves whole-body stretching and overcomes obstacles. The wheel motors referred to as Maxon EC90 Frameless, which are situated at the shank end, facilitate self-balancing motion. The compact four-bar closed-chain leg mechanism design enhances the stability of the thigh structure. As depicted in Fig. 2d, inspired by the robot Actenco model, Kollarčík [39] developed a two-legged wheeled robot referred to as SK8O, which exhibited two closed-chain motion structures, and each knee joint is equipped with a torsion spring. The robot model was validated and simulated using the Gazebo simulator in a 3D simulated environment, and partial experimental results verified the correctness of the model. The existing literature [40] proposed a novel four-bar parallel wheel-legged biped robot (Fig. 2e) with a leg design that utilizes a four-bar mechanism; thus, the robot's obstacle-crossing capability was enhanced. Simulation and experiment results demonstrated the robot's motion robustness in complex terrains. As depicted in Fig. 2f, at the 2023 IEEE ICRA (2023 International Conference on Robotics and Automation) held in London [41], direct drive technology (DDT) demonstrated a highly perceptive and autonomously decision-making robot TITA, which is capable of performing wheel-balance

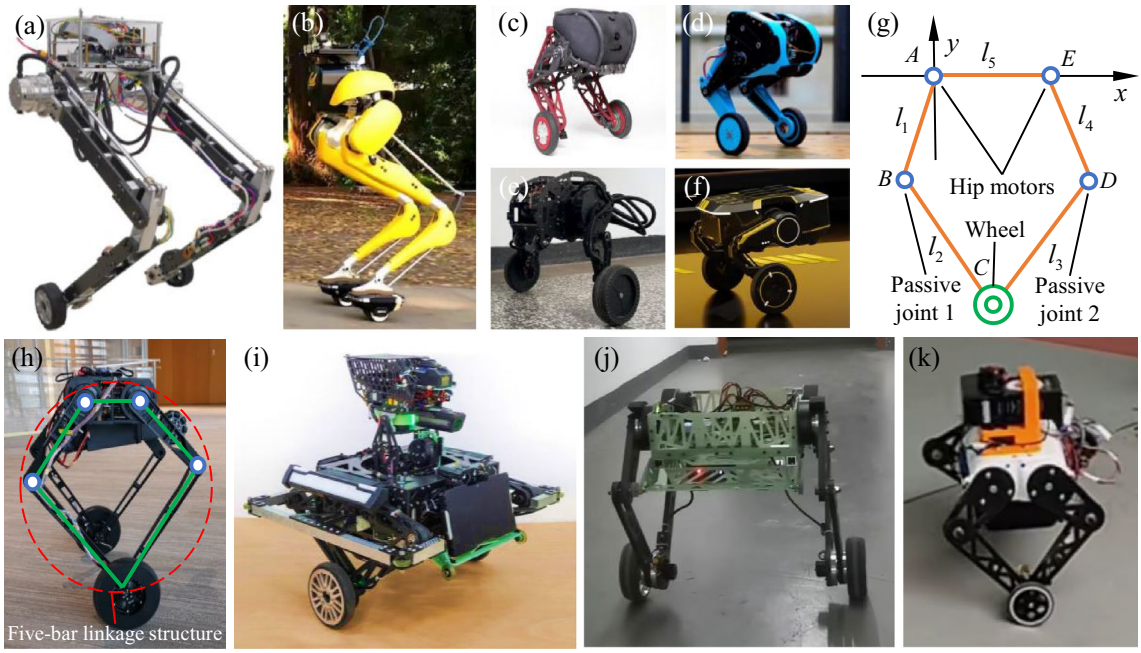

Fig. 2 Single-legged closed-chain wheel-legged biped robots. **a** SR600, Ref. [24]. **b** Cassie, Ref. [38]. **c** Ascento, Ref. [13]. **d** SK8O, Ref. [39]. **e** Jumping wheel-legged robot, Ref. [40]. **f** DDT TITA, Ref. [41]. **g** Five-bar closed chain structure diagram. **h** Tencent Robotics X robot, Ref. [22]. **i** Dream Wings Team robot, Ref. [42]. **j** Open-source robot 1, Ref. [43]. **k** Open-source robot 2, Ref. [44]

motion, jumping, and wheel walking. The aforementioned robot combines the efficiency and agility of the wheeled robots, and it exhibits the adaptability to complex environments exhibited by the legged robots. As an improved version of the aforementioned robot [40], its exceptional maneuverability enables it to maintain stability when crossing various obstacles and adapt to flexible motion in various complex terrains.

The single-legged partially closed-chain wheel-legged biped robots mainly utilize self-balancing motion and jumping motion, and partial robots can also complete one or more motion mode, either the bipedal driving walking or roller skating. Because the upper limb structure is usually not installed, it is not possible to achieve cooperative upper limb motions. Compared with single-legged open-chain wheel-legged biped robots, four-bar closed-chain wheel-legged biped robots exhibit lower center of gravity, more stable external structure design, and more accurate task execution in complex environments.

2.2.2 Single-Legged Fully Closed-Chain Wheel-Legged Biped Robots

Generally, the single-legged fully closed-chain wheel-legged biped robots adopt a five-bar closed-chain structure; usually, the hip joint is symmetrically distributed with four joint drive motors to control the motion of the thigh, and two driving wheels are installed at the shank end; the whole robot generally exhibits more than 6-DOFs. The schematic diagram of the mechanism is illustrated in Fig. 2g. l_1 and l_4 denote thigh lengths, which generally satisfy $l_1 = l_4$; l_2 and l_3 denote shank lengths, which generally satisfy $l_2 = l_3$; and l_5 denotes the mounting distance of the two hip motors. The structure of the five-bar closed-chain wheel-legged biped robot is more stable than that of the four-bar closed-chain wheel-legged biped robot, and the motion ability of the complex scenarios is stronger. As depicted in Fig. 2h, Wang et al. [22] proposed a novel five-bar closed-chain wheel-legged biped robot, which also added a balanced tail structure to the tail of the floating base. The robot exhibits a total weight of 14 kg and can achieve variable height adjustment, two-wheel rotation, and S-bend forward and crossing-obstacle tasks. In regard to adapting to complex environments, this robot exhibits a superior ability. In addition, the RoboMaster Mecha Masters held in China attracted an immense number of students from universities worldwide. The robot built by the Dream Wings team players of Harbin Engineering University (HEU) is depicted in Fig. 2i, [42]. The leg structure of this robot adopts a five-bar closed-chain wheel-legged configuration, and the top is also equipped with a rotating head for hitting an enemy. Other competitors have developed some single-legged fully closed-chain wheel-legged biped robots based on the open source robot files, each of which exhibits valuable technical advantages (Fig. 2j [43] and Fig. 2k [44]). In addition to the typical five-bar

closed-chain wheel-legged biped robots, there are other forms of single-legged fully closed-chain wheel-legged biped robots, which combine the jumping motion characteristics of jumping robots [45, 46] with the self-balancing motion advantages of two-wheeled robots [47, 48]. Zhang et al. [49] designed a wheel-legged biped robot with a wheeled motion–jumping motion combination. The gear train and the fully closed chain four-linkage structure can realize a jumping motion. The maximum size of the robot is 16.8 cm, the maximum jumping height is 14 cm, the ratio of the maximum jumping height to the maximum size is 0.83, and the wheels at the bottom can realize self-balancing wheeled motion.

The single-legged fully closed-chain wheel-legged biped robots combine the advantages of both wheeled and legged robot configurations; thus, they gain the high energy efficiency advantage of the wheeled drive mechanism while benefiting from the excellent environmental adaptability exhibited by the robot legs. Consequently, they have gradually become a novel research topic in the field of wheel-legged biped robots. Compared with the single-legged open-chain wheel-legged biped robot structure, the wheel-legged biped robots with the closed-chain linkage structures (i.e., single-legged partially closed-chain wheel-legged biped robots and single-legged fully closed-chain wheel-legged biped robots) exhibit a more stable structure, more enhanced adaptability when subjected to complex external environments, stronger impact resistance performance, and more optimal adaptability to complex terrain.

In addition to the four types of wheel-legged biped robots mentioned above, there are also various types of variable-structure wheel-legged robots. For example, Liu et al. [50] proposed a metamorphic robot based on the characteristics of wheel-legged hybrid motion. It can switch between car mode, support mode, and humanoid mode through self-reconstruction and deformation of its own mechanism. The switching between the three modes is shown in Fig. 3a–c. In another study, the literature [51] completed the stability analysis and configuration design of an unmanned deformable vehicle based on the principle of coupled reconstruction motion. The proposed unmanned deformable vehicle can achieve high-speed driving in car mode and can also switch between car mode and humanoid mode. The humanoid robot DRC-HUBO + [23] can also be seen as a wheel-legged biped robot with variable configuration capability. The difference is that the driving wheel of this robot is installed in the knee joint, while the passive wheels are installed at the foot. By lowering the center of gravity to a kneeling posture and using the rolling motion of the active knee joint wheel and the passive foot joint wheel, ground motion is achieved as shown in Fig. 3d. When the robot encounters a step, neither the active knee joint wheel nor the passive foot joint wheel touches the ground, and it moves forward in the walking mode of a bipedal robot, as shown in Fig. 3e. The literature

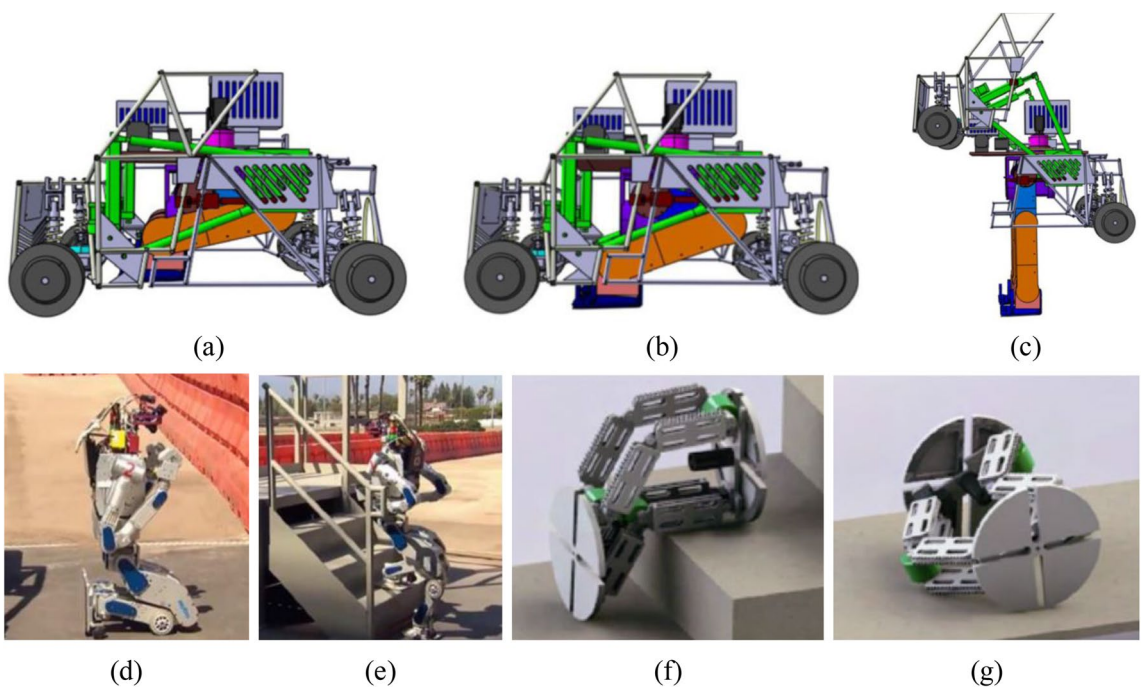

Fig. 3 The novel wheel-legged robots with a variable structure. **a** Car mode, Ref. [50]. **b** Support mode, Ref. [50]. **c** humanoid mode, Ref. [50]. **d** DRC-HUBO + robot wheeled motion mode, Ref. [23]. **e** DRC-HUBO + robot legged motion mode, Ref. [23]. **f** Stair climbing motion mode, Ref. [52]. **g** Two-wheels motion mode, Ref. [52]

[52] proposed a multi-mode two-wheeled mobile robot with a planar single-loop closed-chain link mechanism as the body. It can achieve folding and unfolding modes and three types of motion by controlling the deformation of the body. It can climb steps by controlling the body to form a concave polygon, as shown in Fig. 3f. Under the two-wheeled motion mode, it adapts to different terrain environments by adjusting the wheelbase and the length of the rear part, as shown in Fig. 3g. Through the analysis of recent innovative variable wheel-legged biped robots, it can be seen that these robots have greater potential in adapting to the external environment, and their variable configuration motion modes are more diverse. However, the overall size of the mechanism is larger, and achieving stable switching is more challenging.

3 Research on the Control Strategy of Wheel-Legged Biped Robots

Motion control and stability crucially influence balancing, turning, jumping, and mode switching for wheel-legged biped robots. Designing robust controllers can facilitate the adjustment of the robot's motion performance, reduce mechanical vibrations, and enhance motion accuracy; thus, robot movements that closely align with the desired planning can be achieved. Unlike the more mature trajectory tracking and anti-disturbance control for wheeled mobile robots [53–57], the control system of the wheel-legged biped robots is more complex. It involves not only the application of sensor technology and hardware drive system in the hardware control system, but also various research on control strategies for the dynamic, two-wheel balance control [22, 58], the bionic jumping control for legs [40], and the WBC for integrating the wheels and legs [59, 60]. These aspects constitute one of the most critical components of the wheel-legged biped robot system.

3.1 Hardware Control System

3.1.1 Application of Sensor Technology

Sensors, which are essential hardware components in wheel-legged biped robots, perceive the external environment and obtain position information. They can achieve the dynamic balance control for two-wheel configurations, the bionic jumping control for legs, and the WBC for integrating the wheels and legs. They facilitate simultaneous localization and mapping technology. Various signal sensors crucially influence the hardware control system of the wheel-legged biped robots and generally comprise the sensitive elements, conversion elements, transformation circuits, and auxiliary power sources [27]. Due to their characteristics, namely miniaturization, intellectualization, and digitalization, they occupy a significant position in robot control system [61]. The sensors mounted on the wheel-legged biped robots mainly include the inertial measurement unit (IMU), motor encoders, visual cameras, six-axis force or torque sensors, and velocity or acceleration sensors. These sensors work in tandem to perceive the external environment and position information and provide feedback to the control development board system of the wheel-legged biped robots. The control development board system, subsequently, responds based on the real-time measurement data and on the signal it receives [13].

The accelerometer in the IMU system can detect the independent three-axis acceleration value of the robots in the world coordinate system; furthermore, the gyroscope can detect the angular velocity value of the robot relative to the world coordinate system and calculate the motion attitude of the robot according to the obtained three-dimensional control angular velocity and angular acceleration [62]. The control system can realize the closed-loop control effect of the wheel-legged biped robots according to the comparison of the obtained spatial motion posture with the balance posture or the desired posture. The motor encoder is a signal acquisition device that prepares and converts motor signals or data into signals that can be utilized for communication, transmission, and storage, and absolute encoders are the most common motor type. The servo drive control component reads the motor encoder to obtain wheel information such as the position and velocity, and finally realizes the high-precision position and velocity control of the motors [59]. Wheel-legged biped robots may collide with obstacles in the environment during motion. The visual cameras can obtain the abundant point cloud data of obstacles in the environment, and the robot can achieve simultaneous localization and mapping as well as obstacle avoidance functions combined with the visual positioning algorithm. The six-axis force/torque sensor is a type of sensor that endows wheel-legged biped robot with force sensing capability. Because the sensor can obtain three forces (i.e., f_x, f_y, and f_z) and three torques (i.e., τ_x, τ_y, and τ_z) in the coordinate system, it crucially influences the simultaneous realization of high-precision torque control and interaction control within the environment. In addition, the velocity or acceleration sensor also crucially facilitates the measurement of the motion velocity and acceleration in the wheel-legged biped robots during obstacle crossing [27]; thus, it crucially enables the realization of the wheel-legged biped robot in the ground departure, flight, attitude adjustment, and landing process, and is an essential sensor for many wheel-legged biped robots to achieve real-time feedback control. In addition to the aforementioned traditional sensors, biomimetic sensors combined with biological nature have also exhibited highly considerable research progress in recent years [63–66]. They can be potentially utilized in the sensor system layout of the

wheel-legged biped robots; thus, they can establish a multi-biosensor integrated system, laying a hardware foundation for the intelligent and human–robot–environment interaction control of wheel-legged biped robots.

3.1.2 Hardware Drive System

The hardware control system of the wheel-legged biped robots includes various sensors, and the hardware drive system is also crucial. The system mainly comprises the drive motors, reducers, and drivers. The drive motor is an essential component for providing power output to the wheel-legged biped robots. By adjusting the motor speed, it can control energy storage and release, and its performance directly affects the robot's motion capabilities, such as speed, driving torque, trajectory control precision, anti-disturbance performance, and operational stability. Therefore, the motor should generally possess characteristics such as small size, light weight, high torque, and stable operation, which influences its significant impact on wheel-legged biped robots. Typically, the selection of the hip joint motors differs from that of drive wheel motors. The former tends to prioritize high torque, high reliability, and fast response speed, whereas the latter focuses on fast rotation, high precision, and strong anti-disturbance capabilities. For example, the Ascento [13] hip joint motors utilize ANYbotics ANYdrive, and the wheel motors utilize Maxon EC90 Frameless, and the frameless torque motor has a wide range of applications in wheel-legged biped robots. Under less stringent requirements, the same motors can also be utilized for both the hip joints and the wheels. For instance, SK8O [39] utilized the eX8108 brushless DC motors for both hip joint and wheel motors.

The currently popular frameless torque motors, brushless DC gear motors, and direct drive motors have been widely used in wheel-legged biped robots. The frameless torque motors have the characteristics of small size, large torque, fast response speed, and stable performance. The motor requires less installation space and can achieve the effect of low-speed and high-torque power output. Since all motor components are integrated into the machine elements, it is less affected by external environmental temperature and pressure. Ascento robot [13] used the frameless torque motors. The brushless DC gear motor includes a reduction gearbox, which obtains greater driving torque through speed reduction and can achieve instant powerful burst force output. For example, the Unitree A1 motor [67] integrates the rotor, stator, and controller, adopts RS-485 communication mode with the development board, and comes with a temperature sensor to prevent abnormal damage caused by temperature rise. The HT-04 motor [43] is equipped with a 12-bit magnetic encoder, which can measure the motor's angle position information in real time. It is a highly integrated DC brushless gear motor that integrates the reducer, driver, and encoder. The trend of integrated design has become one of the trends to adapt to lightweight design and such motors appear in literatures [36, 42]. In recent years, more and more direct drive motors have been applied to wheel-legged biped robots. The direct drive motor is not connected to the reduction gear, but directly connects the robot's linkage mechanism, avoiding energy loss caused by intermediate gear mechanical structures and improving the control accuracy of the robot system. This type of motor plays an important role in achieving high-speed and smooth motion in wheel-legged biped robots, such as the DDT robot from the Direct Drive Technology Ltd [40]. The direct drive motors system used in some legged robots, such as Minitaur robot [68] and MIT Cheetah robot [69], are also worth learning from.

The specific selection of frameless torque motors, brushless DC gear motors, direct drive motors, or other types of drive motors for the wheel-legged biped robots should be further determined based on the robot's actual working environments, technical requirements, and structural design solutions. Reducers mainly reduce speed and increase torque, whereas the driver sends instructions to the motor for execution, thereby driving the actuator's movement. Many drivers are designed with bio-inspired features. For example, Duncan et al. [46] observed that compared with using muscle characteristics alone, by utilizing a power modulation strategy, a higher peak power can be achieved. By combining series-elastic (SE) actuators with variable mechanical advantage (MA), SE power modulation can be achieved. Based on this principle, the jumping robot referred to as Salto achieved 78% of *Galago senegalensis*'s vertical jumping agility. Figure 4a, b depicts the SE actuator and MA element-fused power modulation system model and the Salto robot, respectively. In addition to the SE–MA combination, inspired by the characteristics of biological muscle–tendon tissue structure, reference [70] fused elastic driving with variable cell structures, and a multi-configurable biomimetic elastic actuator for controlling the configuration of a planetary differential gear set was designed. Thus, a drive control strategy that integrates output power modulation, energy regulation, and release control was developed. Consequently, the single-legged jumping robot's jumping height increased by 6.8%. Figure 4c, d, respectively, illustrates the Hill muscle model and muscle–tendon model, and Fig. 4e illustrates the prototype of the multi-configurable biomimetic elastic actuator. Both of these actuators have been practically applied in jumping robots and could be potentially combined with wheel-legged biped robots to enhance their jumping capabilities for legs.

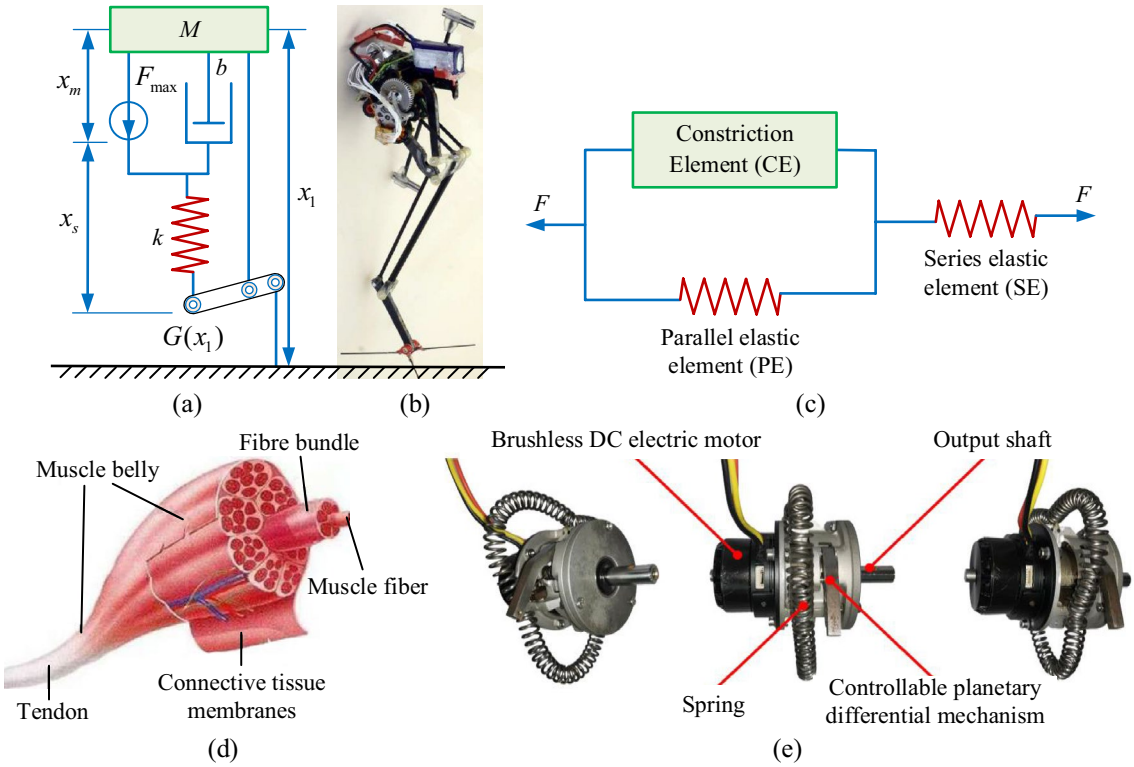

Fig. 4 **a** Power modulation system model of SE driver and MA element fusion, Ref. [46]. **b** Salto, Ref. [41]. **c** Hill muscle model, Ref. [70]. **d** Muscle–tendon model, Ref. [70]. **e** Principle prototype of multi-configuration bionic elastic driver, Ref. [70]

3.2 Control Method and Its Application Analysis

In addition to building a suitable hardware control system for the robot, designing a rational controller is also a crucial method of achieving a robust and real-time control effect. In recent years, research on control algorithm and application for wheel-legged biped robots has exhibited significant progress. These control algorithms crucially influence various tasks, such as two-wheeled dynamic balance and motion, leg bending and jumping, bipedal walking, upper limb coordination operation, and smooth mode switching between different motion modals. In the control methods for wheel-legged biped robots, some control strategies and advantages associated with quadruped robots have been adopted [12, 71, 72], aiming to design controllers with characteristics such as robustness, adaptability, real-time responsiveness, and feasibility. The motion control problem of the wheel-legged biped robots is relatively complex, and it is particularly related to the robot's dynamic balance control for two-wheel configurations, the bionic jumping control for legs, and the WBC for integrating the wheels and legs in unstructured environments. Control strategies crucially influence the robot's entire motion process. The following section focuses on the detailed introduction of the control problems related to these three aspects.

3.2.1 Dynamic Balance Control for Two-Wheeled Robots

As an underactuated and inherently unstable mobile robot system, the wheel-legged biped robots require the rotation of the wheels to achieve dynamic balance. Therefore, two-wheeled dynamic balance control essentially enables the robot to perform other tasks. In recent years, the wheel-legged inverted pendulum model has been widely utilized to analyze the dynamic balance control of wheel-legged biped robots [47, 73, 74]. The schematic diagram of the wheeled inverted pendulum model is depicted in Fig. 5a [75, 76]. The upper square represents the rigid body, the lower circle represents the wheel, and the line between the wheel axis and the body axis represents the leg linkage. The model parameters illustrated in Fig. 5a include the friction force f_f from the ground to the wheel, the wheel radius r, the horizontal and vertical forces f_{wx} and f_{wy} exerted on the pendulum by the wheel, and the horizontal and vertical forces f_{lx} and f_{ly} exerted on the body by the pendulum. The angle α denotes the inclination of the pendulum with respect to the y-axis, and γ denotes the orientation of the body with respect to the x-axis, satisfying $\beta = \alpha + \gamma$. D and d denote the distances from the pendulum's center of mass to the wheel's center and the rigid body's center of mass (CoM) to its axis, respectively. The

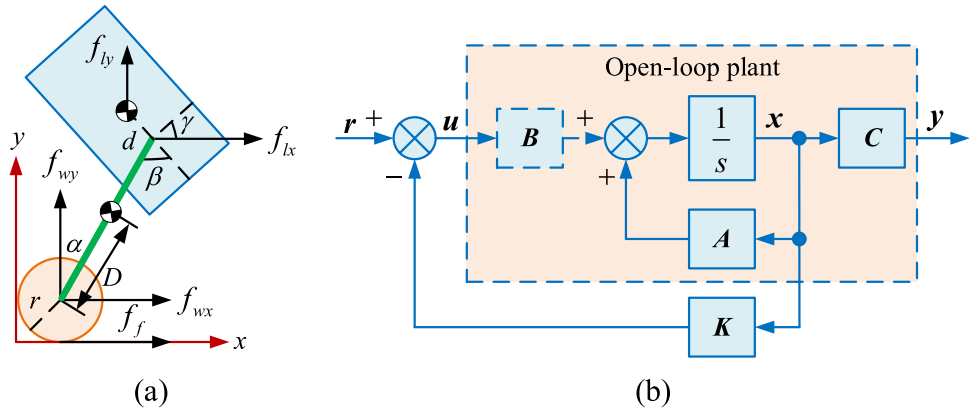

Fig. 5 **a** Wheel-legged inverted pendulum model, Ref. [76]. **b** LQR control block

wheel, pendulum, and rigid body are subjected to Newton's equations of motion in the horizontal and vertical directions, and to Euler torque equation in the rotational direction; thus, the force and torque acting on the wheel-legged inverted pendulum model can be determined using nine force or torque balance equations.

LQR, one of the most widely utilized optimal control algorithms, is essentially a method of determining the optimal control matrix K using full-state feedback control. Therefore, LQR optimal control can be considered as a full-state feedback control. It is easy to construct closed-loop optimal control [22, 25]. The LQR control method is widely utilized in the dynamic balance control of the wheel-legged biped robots. As depicted in Fig. 5b, the interior of the system is an open-loop system, and a simple closed-loop control process is formed through the external matrix K; furthermore, the output parameter y of the system is finally obtained. To obtain a clearer understanding of the control form, the LQR control principle is briefly introduced. According to the wheel-legged inverted pendulum model of the wheel-legged biped robot component, the state space matrix equation of the multi-input–multi-output linear system can be determined as follows [75]:

$$\begin{cases} \dot{x} = Ax + Bu \\ y = Cx + Du \end{cases}, \tag{1}$$

where x denotes the state vector of the controlled object; u denotes the input vector of the controlled object; y denotes the output vector of the controlled object; and A, B, C, and D denote the system matrix, input matrix, output matrix, and direct transfer matrix, respectively. The wheel-legged biped robots can be regarded as an inverted pendulum model, and the linear state feedback control signal can be expressed as follows:

$$u = -Kx(t). \tag{2}$$

The cost function performance index J can be defined as follows:

$$J = \int_0^{\infty} \left(x^{\mathrm{T}}Qx + u^{\mathrm{T}}Ru\right) \mathrm{d}t, \tag{3}$$

where Q denotes a positive semi-definite state weight matrix that satisfies $x^{\mathrm{T}}Qx \geq 0$, and R denotes a positive definite control weight matrix. $J \rightarrow \min$, which represents the goal of LQR optimal control, is essentially embodied in the utilization of small control to maintain lower error; thus, the comprehensive optimal control goal of energy and error is achieved. Input u satisfies the following equation:

$$u = -R^{-1}B^{\mathrm{T}}Px, \tag{4}$$

where feedback gain matrix $K = R^{-1}B^{\mathrm{T}}P$, and matrix P satisfies the differential equation pertaining to the Riccati matrix:

$$A^{\mathrm{T}}P + PA - PBR^{-1}B^{\mathrm{T}}P + Q = 0. \tag{5}$$

Because Eq. (5) is relatively complicated, the numerical solution of the Riccati equation can be obtained using computer programming. Thus, the LQR method can realize the asymptotic stability of the system near the linearized equilibrium point.

The LQR control strategy crucially influences the two-wheeled dynamic balance control of the wheel-legged biped robots. For example, the wheel-legged biped robot model [77] is decoupled into a wheeled inverted pendulum model and a floating base model. The LQR method is utilized to design a baseline controller, which ensures the optimal balancing performance of the wheeled inverted pendulum. The proposed control algorithm enables the robot WLR-II to stand stably on slopes. To achieve reliable stability control, a robust and anti-disturbance LQR method is chosen [13], and the experiment results indicate that even after being subjected to external pulling, pushing, and additional load factors, the control algorithm can still achieve satisfactory stability control, demonstrating the LQR's superior anti-disturbance performance in complex environments. In reference [17], a control strategy integrating the inverted pendulum model and LQR controller is proposed for wheel-legged

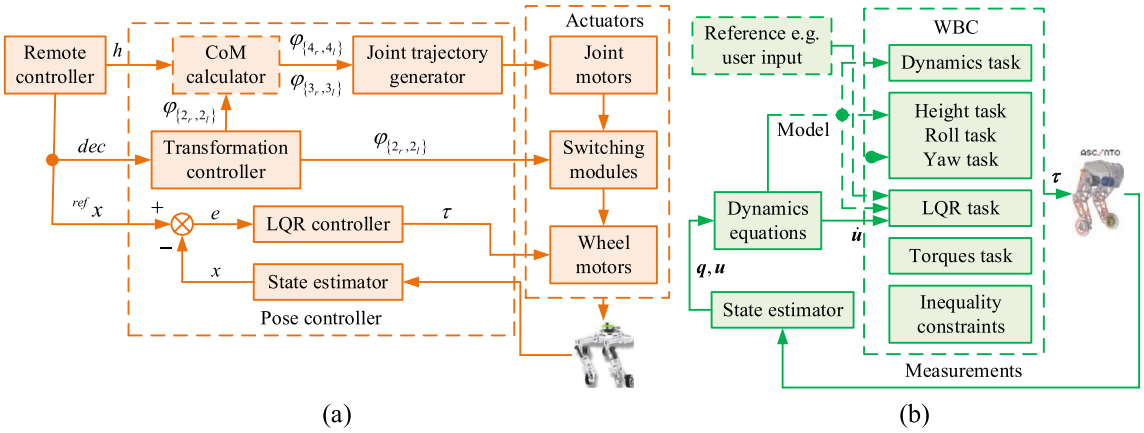

Fig. 6 **a** LQR control block diagram, Ref. [17]. **b** LQR–WBC control block diagram, Ref. [25]

biped robots. The control strategy block is depicted in Fig. 6a. The designed LQR controller is applied to the wheel motors, and the feasibility of the designed controller is verified in both simulation and prototype experiments. Combining LQR with other methods is a crucial method of optimizing the two-wheeled dynamic balance control. For instance, Klemm et al. [25] obtained the dynamic expression based on the kinematic loop of the wheel-legged robot and applied a novel LQR that combines the WBC algorithm and Ascento's outdoor motion control. The control strategy block is illustrated in Fig. 6b, and multiple physical experiments validated the proposed method's robustness and adaptability to complex terrains. Cui et al. [75] analyzed the optimal balance control problem for closed-chain wheel-legged biped robots by integrating the infinite horizon LQR method with RL, which enables the accomplishment of dynamic balance tasks without the precise robot dynamics model. In the research presented in reference [14], focusing on a 6-DOF wheel-legged biped robot and considering the adverse effects of the modeling parameter inaccuracies, the researchers designed an LQR robust motion control with both feedforward and feedback components, which exhibited superior performance in trajectory tracking and resistance to external disturbances. The combination of LQR and fuzzy PD control also exhibits practical value and has received preliminary validation. For example, [40] proposed a control strategy combining LQR and fuzzy PD controllers, which enables obstacle traversal and balance motion in unstructured environments; thus, a feasible solution for the stable balance control of wheel-legged biped robots is provided.

In addition to the LQR control methods that are widely utilized in two-wheeled dynamic balance control, MPC technology, the linear system controller is also popular in robot control. MPC, an advanced control strategy based on a unified multi-variable dynamic model, can solve multi-variable constrained control problems [78–80]. The combination of the MPC and LQR can achieve the expected dynamic balance control effect more optimally. Xin et al. [81] proposed a dynamic control framework of a wheel-legged biped robot based on discrete time MPC. The hierarchical control framework includes a foot trajectory planner, a trajectory generator, and a whole-body controller using quadratic optimization (QP); the simulation results indicate the robustness and applicability of the control framework, and the hierarchical control framework is illustrated in Fig. 7a. The researcher, who assumes that the Cart-linear inverted pendulum model (Cart-LIPM) is the rolling motion model of the wheel-legged biped robot [16], adopts the MPC technology to build the robot control system framework and utilizes LQR to stabilize the linear system of the wheel-legged biped robot; and the simulation results indicate that the robustness of the dynamic balance motion is significantly increased. Inspired by the model decoupling concept, Cui et al. [37] decouples the wheel-legged biped robot into a variable-length wheeled inverted pendulum and a five-linkage multi-rigid body system, and designs a time-varying LQR–MPC controller. The LQR–MPC control process is depicted in Fig. 7b. The Kalman filter is utilized to estimate the optimal state of the robot system, and the designed controller exhibits strong robustness.

In addition to the aforementioned dynamic balance control methods of the wheel-legged biped robots, proportional integral derivative (PID) control (including PI control and PD control), a traditional control method, exhibits a simple system structure, easy adjustment and learning performance, and a satisfactory practical control effect and is widely utilized in practical robot control systems. The PID control method mainly considers two aspects, namely global asymptotically stable PID control and a PID parameter tuning strategy, and it is ultimately utilized to achieve system stability, accuracy, and timeliness [82, 83]. The PID control method of the wheel-legged biped robots, which differs from the PID

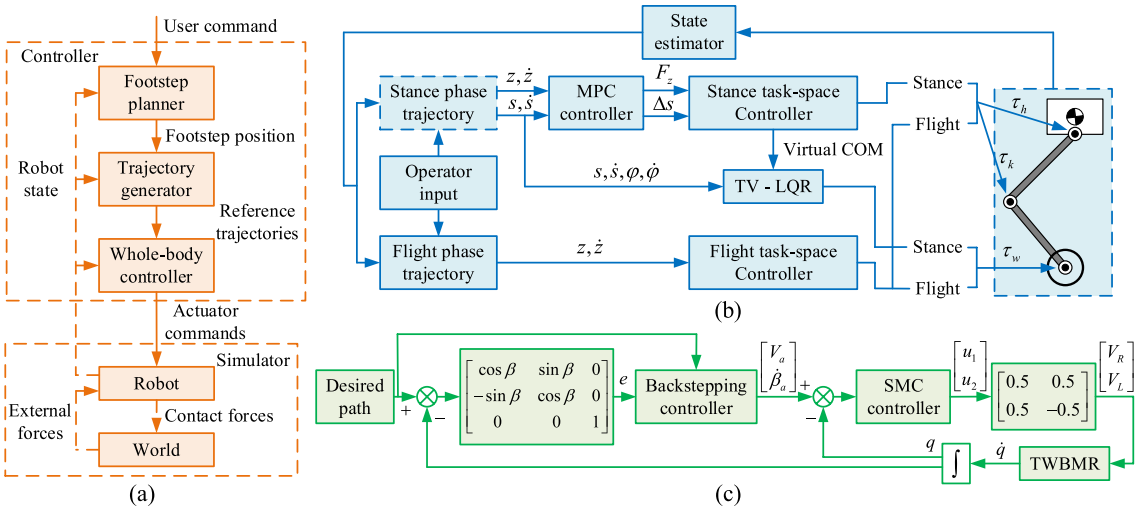

Fig. 7 **a** Hierarchical control block diagram, Ref. [81]. **b** the LQR–MPC control block diagram, Ref. [37]. **c** Two-layer SMC control block diagram, Ref. [58]

controller utilized in quadruped robots [84], appears only when completing a certain task, and other control methods may be adopted to complete the next task after switching [13]. In the existing literature [85], two simple PD control methods are utilized to achieve robot motion control, and the researchers choose a particle swarm optimization algorithm to optimize PD control parameters; thus, rapid convergence, which facilitates the attainment of a global optimal solution, is enabled, and the computation-expensive process for complex and highly nonlinear models is reduced. Zhou et al. [77] combined a PD feedback control law and centroid control law to reduce the feedforward compensation error, and the proposed control algorithm can enable the robot to achieve the expected control effect more optimally. Aiming at the variable height dynamic balance problem of the wheel-legged biped robot SR600 [8], a PID controller based on tilt angle error was proposed. The proposed control strategy was simulated in an ROS Gazebo environment, and the feasibility of the method was verified through prototype experiments. Sliding mode control (SMC) also exhibits application scenarios in the balance control of the wheel-legged biped robots. As depicted in Fig. 7c, Nasim Esmaeili et al. [58] proposed a novel two-layer SMC algorithm; thus, the dynamic balance and trajectory tracking of robots was realized. The experimental results indicate that the sliding surface converges to zero, and that the two sliding surfaces converge to zero, which can complete the dynamic balance and trajectory tracking tasks of the wheeled legged biped robot. Although the SMC method exhibits satisfactory track tracking ability and anti-disturbance, its flutter suppression problem should be further solved, which increases the difficulty pertaining to its application in the balance control of the wheel-legged biped robots.

3.2.2 Bionic Jumping Control for Legs

For wheel-legged biped robots, to achieve obstacle-crossing tasks through leg bending and jumping, it is necessary to consider the bio-inspired jumping control for legs, which shares similarities with the jumping motion characteristics of bio-inspired jumping robots [28, 86, 87]. In nature, jumping is a common locomotion mode for animals [10, 88]. Due to its discrete foothold requirement, jumping exhibits significant advantages in obstacle-crossing performance and explosive energy release. Additionally, it offers a wide range of motion and high reliability, and many animals adopt jumping as a means of overcoming harsh survival conditions, escaping from predators, and efficiently hunting for food [27]. For instance, locusts, which are typical arthropods, can achieve jumping heights dozens of times their own body height owing to their well-developed hind legs [89, 90]. Fleas possess specialized muscles and flexible joints in their hind legs, which enables them to store large amounts of energy and release it rapidly during jumping [91, 92]. Frogs have been widely analyzed for their exceptional jumping ability, and researchers have designed various bio-inspired frog jumping robots by combining their biological characteristics with jumping mechanisms [28, 93]. In addition to insects and frogs, some mammals also demonstrate impressive jumping capabilities. Kangaroos possess the highest and furthest jumping distance among mammals [94]. Monkeys exhibit remarkable jumping abilities as they leap between dense tree branches [46].

By analyzing the jumping characteristics of animals and insects in nature, we can summarize the changing patterns of leg posture and the mechanisms of energy storage and release during the jumping process. Taking inspiration from

biological movements can help solve the jumping problem of the wheel-legged biped robots from a biomechanical perspective [95]. In particular, improving the ability to cross vertical obstacles during high-speed movements is of great significance for overcoming obstacles and gaps larger than the radius of the wheels. The control of the jumping process of the wheel-legged biped robots can be decoupled into three dimensions: jump height control, horizontal velocity control, and spatial posture control. Accurately modeling and controlling underactuated and nonlinear system models is a complex process. Nonlinear models are usually simplified using state-space equations to establish linearized models for further processing. Unlike single-legged jumping robots, wheel-legged biped robots generally make contact with the ground at two points. Their stability is higher than that of single-legged jumping robots (which make contact at a single point), but lower than that of quadrupedal jumping robots (which make contact at multiple points). By simulating the deformation characteristics of springs using joint motors, mechanical impact damage during ground contact can be reduced, and energy utilization efficiency can be improved.

Researchers have conducted extensive studies on the jumping control of the wheel-legged biped robots; thus, they aim to achieve jumping capabilities similar to jumping robots [96–98]. Jumping motion is a primary mode of locomotion for the wheel-legged biped robots in unstructured terrain, and the robot's jumping performance is a crucial indicator of its adaptability to complex terrains [99]. As depicted in Fig. 8, the jumping process of the wheel-legged biped robot can be divided into four phases: take-off, conglomeration, landing preparation, and landing, which correspond to moments t_0, t_1, t_2, t_3, and t_4, respectively. During the take-off phase, the robot's CoM descends as the legs contract, accumulating the energy required for the jump. In the conglomeration phase, the trajectory of the robot's upper body, wheels, and overall CoM is controlled to attain the desired jumping height. In the landing preparation phase, the robot's wheels descend from the highest point to the ground, and the overall CoM attains its lowest point. In the landing phase, the robot maintains balance, returns to its initial posture, and prepares for the next action. It is evident that in a complete jumping process of a wheel-legged biped robot, the wheels are in contact with the ground during the first and fourth phases, whereas there is no contact during the second and third stages. Apparently, in the jumping process of a complete wheel-legged biped robot, during the first and fourth phases, the wheels are in contact with the ground, and during the second and third phases, the wheel are not in contact with the ground.

Stable jumping control algorithms are crucial for the smoothness of the jumping process. Animals and insects with strong jumping abilities have relatively easy control over their jumping velocity at takeoff. They rapidly release the energy stored in elastic components such as muscles and tendons to obtain a high initial jumping velocity [100]. During the unbalanced state of the flight phase, joint motors still need to rotate for attitude adjustment. The robot control system perceives that the wheels are not in contact with the ground, which requires the introduction of control methods during the flight phase. Attitude control is crucial for the wheel-legged biped robots in the air. The robot body should avoid rotating in the air. If an angle unbalance occurs, attitude correction can be achieved through slight adjustments in angle. This requires position feedback control and velocity feedback control strategies, drawing on control algorithms from the field of biomimetic jumping robots [101]. Fuzzy control algorithms have good control effects in improving the adaptability of robot systems. When combined with position feedback control and velocity feedback control strategies, a closed-loop fuzzy feedback control framework for the robots can be established to correct poor stability caused by energy storage and release. Multi-level closed-loop control is feasible and superior in jumping stability control. External uncertainties and interferences (such as errors in inertia parameters, joint friction, modeling inaccuracies, and unpredictable interferences) can affect the convergence

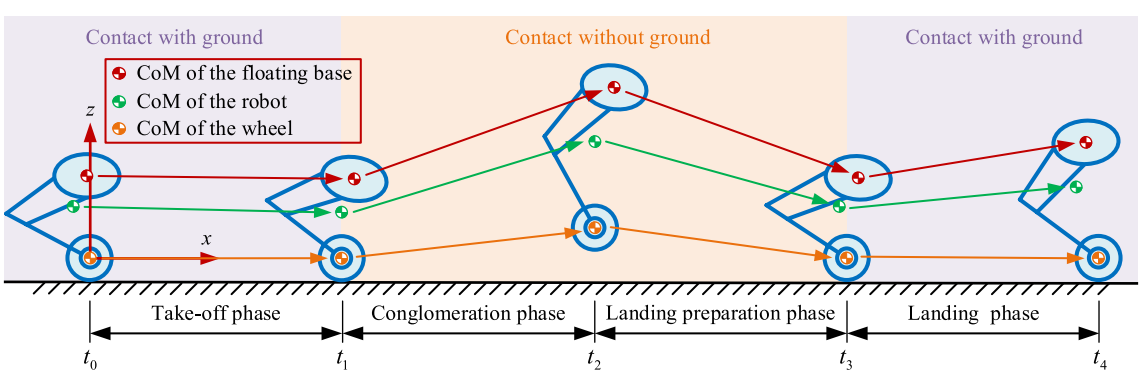

Fig. 8 Jumping phase of the wheel-legged biped robot

time and effect of the robot control system. The whole-body torque controller based on optimal force distribution [102] has achieved good results in solving the jumping problem of wheel-legged biped robots. It can complete fast vertical and horizontal crossings and achieve the expected landing posture.

Currently, some classic wheel-legged biped robots have demonstrated impressive jumping capabilities. For instance, as illustrated in Fig. 9a, a novel jumping two-wheeled robot was designed in an existing study [61], and the authors established a dynamic model for the robot's jumping process. By employing three spring-based jumping mechanisms, the robot achieved jumps exceeding its own height. In Fig. 9b, Boston Dynamics Handle robot [20] exhibited astonishing jumping abilities in a public video, although the specific jumping control algorithm utilized therein has not been publicly disclosed. In Fig. 9c, which is inspired by animal jumping behavior associated with evading predators while running, a wheel-legged biped robot was designed to rapidly move forward through jumping and rolling. The proposed robot featured two wheels and a spring-based jumping mechanism, with an average jump height of 5.9 cm and an average jump distance of 22 cm [103]. Figure 9d illustrates the design created by Zhang et al. [49], which featured a four-bar jumping robot with torsion springs. Through clever mechanism optimization, this robot achieved a larger jumping ratio (jumping height or body height) compared to the Handle robot. It could also continuously perform stable longitudinal and lateral jumping motions. A jumping controller [13] was developed to activate and trigger a predefined sequence of jumps, covering the robot's current state and controlling it to enter the next stage of jumping motion. Inspired by human

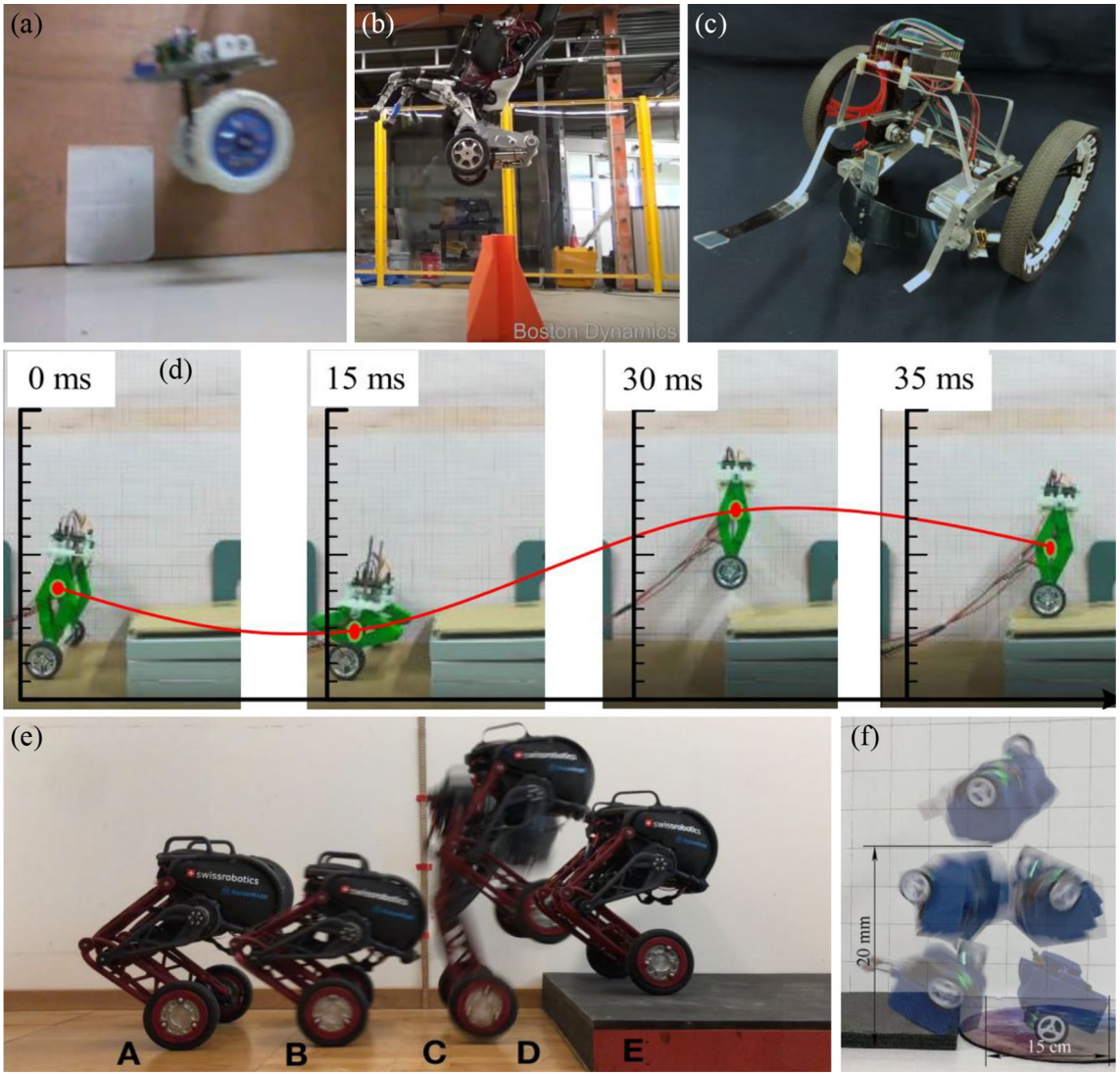

Fig. 9 The jumping motion of the wheel-legged biped robots. **a** Jumping process, Ref. [61]. **b** Handle robot leaping in the air, Ref. [20]. **c** Compact robot, Ref. [103]. **d-f** Jumping process, Refs. [13, 49, 104]

jumping motion, the design included discrete–continuous-stage jumping actions, including leg retraction, jumping initiation, leg lifting, flight, and landing stages. The robot could effortlessly accomplish a 10 cm high step jump, as depicted in Fig. 9e. Analyzing the jumping mechanism and jumping process of the insects is a crucial method of studying the jumping control of the wheel-legged biped robot. Chen et al. [104] designed a balanced wheel-legged biped robot by simulating the biological structure and jumping motion mechanism of the springtail. By constructing Lagrange equations of landing phase and take-off phase, the springtail can realize the jumping action with a 20 cm height and a 15 cm distance, and the jumping process is depicted in Fig. 9f.

Figure 10a depicts the spring motion mechanism model [104]; θ_1 denotes the angle between the gear pitch link and the x-axis direction; θ_2 denotes the angle between the gear pitch link and the base shank link; m_1, m_2, and m_3, respectively, denote the mass of link 1, link 2, and the body; l_1, l_2 and l_3, respectively, denote the length of the centroid of the three members relative to one end of the member; and r_1 denotes the length of the gear pitch. r_2 represents the length of the base shank; w and h represent the width and length of the body part, respectively; x_f and y_f represent the coordinates of the end points of the pitch, respectively; and F_x and F_y represent the forces between the end points of the pitch and the ground in the x and y axis directions, respectively. J_1, J_2 and J_3 represent the moment of inertia of the three components rotating around the center of mass, respectively. α represents the angle between the end of the base shank and the line that indicates the CoM of the body and the direction of the y-axis (i.e., the CoM deflection angle). The study performed by [21] analyzed the jumping characteristics of the wheel-legged biped robot, and introduced a layered scheme of jumping motion planning and control with a wheel–leg combination. A novel W-SLIP model was adopted to represent the basic dynamic characteristics of a wheel-legged biped robot in the jumping process (Fig. 10b, c represent the structural schematics of the standing and take-off phases, respectively).

Literature [21] verified the control effect of jumping through V-REP simulation, and the jump simulation process is illustrated in Fig. 11a. Adam Kollarc [39] described the calculation of the jumping maneuver trajectory and utilized the nonlinear optimization method to obtain the expected jumping trajectory satisfying the discrete dynamics, as depicted in Fig. 11. The simulation results indicated that a 20 cm jumping height, 3.5 cm forward-moving jumping height, and 30 cm jumping distance were attained. However, the stability after jumping is poor, and it is difficult to achieve higher distance jumping action. Guo et al. [40] designed a fuzzy PD jumping controller and applied it to a wheel-legged jumping robot, which enabled the robot to overcome obstacles and adapt to rough terrain, and enhanced its obstacle-crossing ability when subjected to vertical obstacles. The robot exhibits satisfactory robustness to the motion under complex terrain, and the jumping process is depicted in Fig. 11c. In addition to establishing the traditional linear spring jumping motion model, the study conducted by [99] proposed a wheel-legged robot jumping algorithm based on the nonlinear spring model, which exhibits more flexible trajectory planning and lower requirements on the output torque of the hip motor compared with the linear spring model. The simulation results indicate that it is possible to realize wheel-legged no-retractable jumping motion (Fig. 11d), full-planned trajectory jumping motion (Fig. 11e), in-progress jumping motion (Fig. 11f), and in-place jumping motion (Fig. 11g).

3.2.3 Whole-Body Control for Integrating the Wheels and Legs

The WBC for integrating the wheels and legs requires the coordinated control of both the wheels and legs. The WBC method belongs to a prioritized multi-task control mode

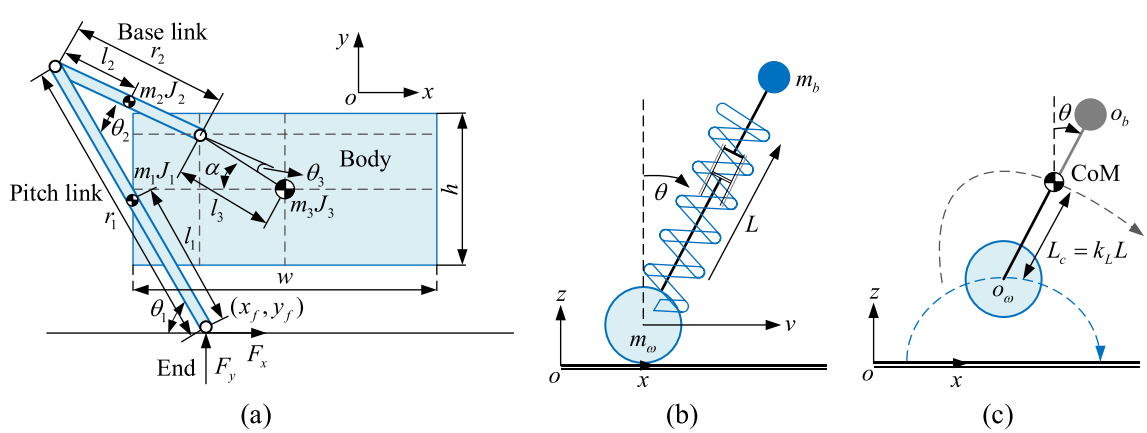

Fig. 10 Jumping mechanism schematic. **a** Jumping motion model, Ref. [104]. **b** Standing model, Ref. [21]. **c** Take-off model, Ref. [21]

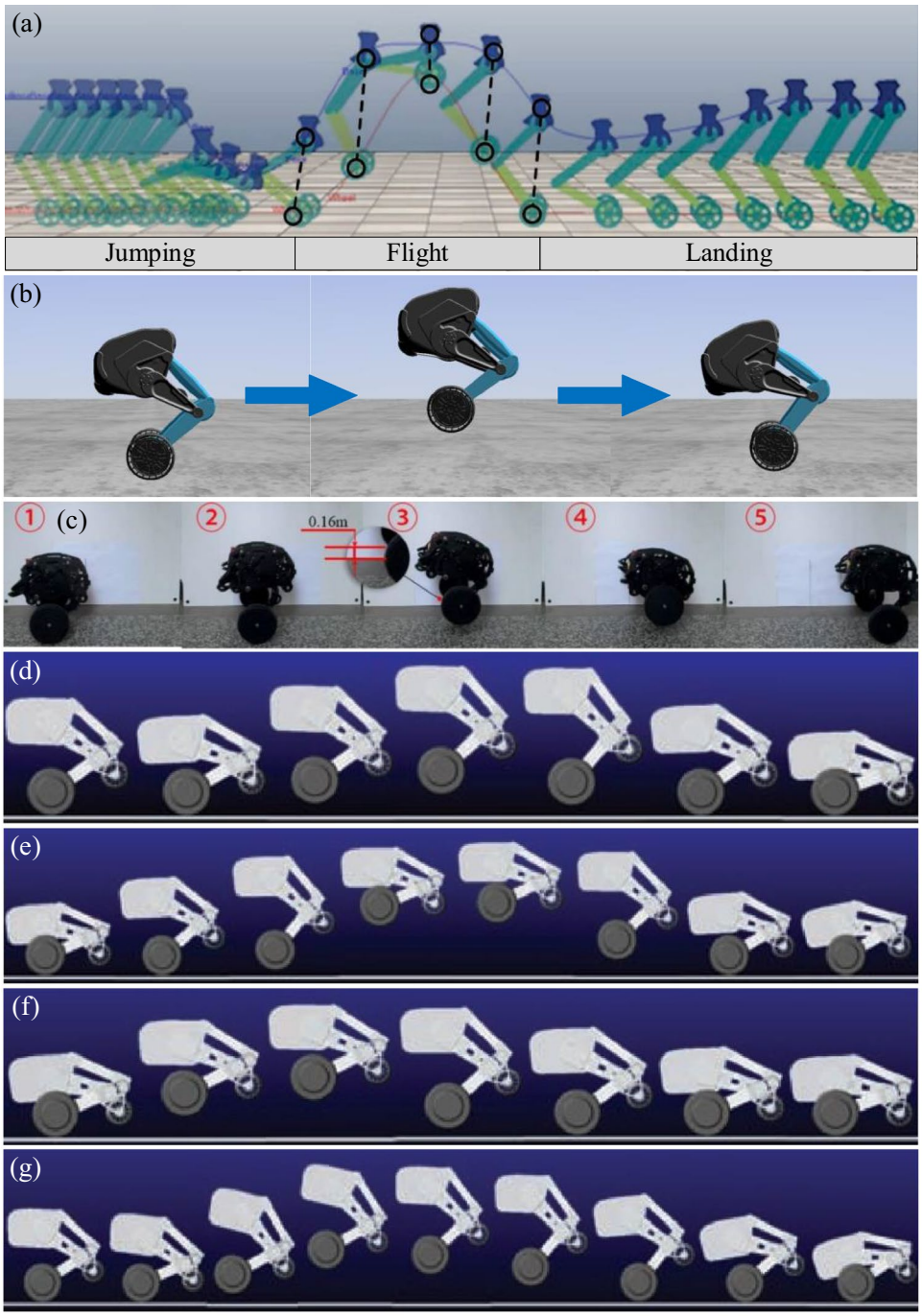

Fig. 11 The jumping motion of the wheel-legged biped robots. **a** Jumping process, Ref. [21]. **b** SK8O robot, Ref. [39]. **c** DDT robot of jump process, Ref. [40]. **d** No-retractable jumping motion, Ref. [99]. **e** Full-planned trajectory jumping motion, Ref. [99]. **f** In-progress jumping motion, Ref. [99]. **g** In-place jumping motion, Ref. [99]

[105, 106]; thus, when a robot simultaneously performs multiple tasks, the tasks should be rationally prioritized to handle scenarios where multiple tasks cannot be executed simultaneously [107]. In various WBC tasks, higher-priority tasks do not conflict with lower-priority tasks. The control strategy and resource allocation problem are analogous to scenarios where some resources (i.e., robot attachments or components) are more critical than others, and the robot attempts to perform multiple assigned tasks. Typically, WBC can be classified into categories such as QP-based task hierarchy WBC [25], null-space projection-based WBC [108], hierarchical quadratic programming WBC [25, 109], and integrated QP and null-space projection strategy WBC [108]. The WBC for integrating the wheels and legs of the wheel-legged biped robots can comprehensively consider tasks such as self-balancing, jumping, and even upper limb collaborative grasping operations (for humanoid open-chain wheel-legged biped robots with upper limbs).

The development of the WBC strategies for the wheel-legged biped robots is highly based on the WBC associated

with quadruped robots [9, 110]. For instance, Muscolo et al. [32] utilized ADAMS software to analyze the biomechanics characteristics and constraints of the human motion. They designed a flexible wheel-legged biped robot capable of mimicking human motion while reducing the robot control complexity. In addition to the creation of a flexible wheel-legged biped robot, a novel control approach for the dynamic velocity and acceleration control of the wheel-legged robots was proposed in [59]. The researchers built a WBC framework that included a trunk motion controller, two torque solvers, a slip predictor, and an online trajectory generator to achieve robust control in a virtual simulation environment. For precise control of the posture, balance, and motion of the wheel-legged robot, Xin et al. [111] proposed a controller design approach; thus, the uncertainties and external disturbances were addressed; this control method effectively achieved posture and motion control for the wheel-legged robot and was validated for effectiveness and robustness in a simulation environment. The WBC control block diagram is illustrated in Fig. 12. Addressing the coupling problem between robot joints that the linearized or the simplified models cannot solve for the wheel-legged robot. Zambella et al. [60] applied the WBC strategy to control wheeled motion. Comparative experimental results indicated that the proposed control algorithm not only reduced computational complexity, but also achieved resistance to disturbances from the external environment. Furthermore, in reference to WBC problems, hierarchical quadratic optimization is utilized as a basic form [25]. In each iteration, a task is added, and a linear equation $A_i\, x = b_i$ represents a motion task. Hierarchical quadratic optimization can be transformed into a QP problem, which defines the optimization variables for the robot. The WBC for integrating the wheels and legs should comprehensively consider the robot's tasks, and the QP problems involved can be referred to in the related literature [110, 112], wherein the authors provide detailed explanations.

The dynamic balance control for the two-wheel, the bionic jumping control for legs, and the WBC for integrating the wheels and legs are the main problems that affect the control strategy of wheel-legged biped robots. In addition to the three main control problems, some scholars have also attempted to analyze the walking control of the wheel-legged biped robots (similar to the walking control of the humanoid robots). For example, literature [16] locks two wheels into two landing points; thus, the walking control of the wheel-legged biped robots can be transformed into the walking control of the biped robots. It is necessary to comprehensively consider decoupling and coupling control, a feedback control concept, and an animal–insect jumping motion mechanism fusion control. Under the action of the established controller, if the motion of the robot system can be maintained to the desired state in each cycle, the system can achieve stable periodic motion.

3.2.4 Linear Controllers and Nonlinear Controllers

Controllers can be divided into linear controllers and nonlinear controllers [113], which are two different types of control systems. The dynamics model of a wheel-legged biped robot is a typical nonlinear and strongly coupled complex system. The nonlinear mathematical model is generally simplified to establish a linearized system model, and designing stable and fast-converging linear controller is the basis for achieving stable control [114]. However, due to the complex nonlinear relationship between some system responses and desired inputs, or the inability of a linear system model to accurately describe the characteristics of the controlled object. It is necessary to design nonlinear controller to achieve nonlinear control of the controlled object. In the context of dynamic balance control of wheel-legged biped robots, legged biomimetic jumping control, and integrated rigid body control of wheel-legged systems, both linear and nonlinear controllers are used, depending on the complexity of the robot model and its configuration. Literature [22] linearized the dynamics model near the balance point of the robot, obtained simplified linear state-space equation, and designed linear controller based on LQR. For the nonlinear dynamics expression at non-equilibrium point, a nonlinear controller based on the interconnection and damping assignment passivity-based control method was designed.

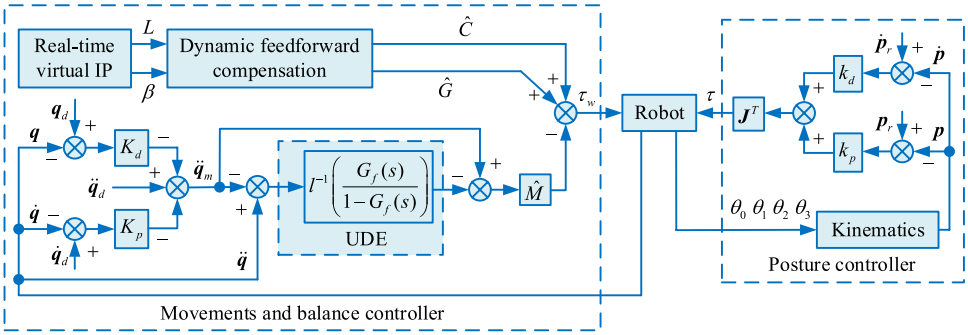

Fig. 12 WBC control block diagram, Ref. [111]

The state-space model of a linear system is shown in Eq. (1), which describes a linear steady-state system model. The state-space model of a nonlinear system is:

$$\begin{cases} x = f(x, u, t) \\ y = g(x, u, t) \end{cases}, \tag{6}$$

where x denotes the state variable for the controlled object, y denotes the output vector for the controlled object, u denotes the input vector, and f and g denote the state vectors.

Linear controllers include PD controller [25], PID controller, LQR controller [14], state feedback controller, etc. The most commonly used linear controller in wheel-legged biped robot is the PID controller, in which the proportional, integral, and derivative components are linear operations. It adjusts the actual signal and desired signal of the controlled object through proportional gain, integral gain, and derivative gain, making the output value of the robot approach the desired value. Linear controllers have the characteristics of fast response speed, stable performance, and simple design.

Nonlinear controllers mainly include model predictive controller [16, 112], robust controller, sliding mode controller [53], fuzzy controller [101], etc., whose mathematical model and control algorithm consider the nonlinear dynamic characteristics of the system. Literature [14] designed a linear feedback LQR controller and a nonlinear feedforward controller, and conducted fusion research on the two controllers. Finally, it was found that the composite controller after fusion had better actual control effect. The design of nonlinear controller is more complex, usually requiring in-depth modeling of dynamics systems and control algorithm design to deal with the complexity and uncertainty of the system. Nonlinear controller can provide higher-level performance and robustness, and can better handle system uncertainty, external disturbances, and system complexity.

For wheel-legged biped robot models with relatively simple configuration and low control accuracy requirement, linear controller can fully meet the performance requirement. However, robot configurations that are more complex and require the execution of multi-mode complex tasks, it is necessary to design nonlinear controller with higher-level performance and robustness. Sometimes, hybrid control methods are also used, combining linear controller and nonlinear controller to fully leverage their respective control advantages.

4 Discussion

The wheel-legged biped robot system mainly comprises mechanical structure, motor drive system, control system, sensor equipment, communication module, trajectory planning or optimization, dynamics modeling, and vibration reduction or suppression (Fig. 13). It is a typical multi-electromechanical equipment integration cooperation system, and it integrates the structural characteristics and motion characteristics of the wheeled robots and legged robots [72, 115, 116]. In the past decade, researchers have benefited from the technical experience obtained from the development of robots such as quadruped robots [12, 71, 117], humanoid robots [80, 84, 118, 119], wheeled robots [7, 120], and jumping robots [28, 46, 121]. The development of the basic hardware and control technology of these robots has led to technical inspiration for the research on wheel-legged biped robots. Many universities and companies have actively conducted relevant research on wheel-legged biped robots, and have achieved unprecedented rapid development in regard to the hardware control system, trajectory planning, dynamics modeling, composite control technology, and multi-sensor fusion applications. However, the research on wheel-legged biped robots began relatively late, especially as a typical ground unmanned automation system, involving robot body structure, system control, motor drive, environment perception, artificial intelligence, and other multi-disciplinary fields, and there is still a significant gap between technical requirements including individual's expected intelligence, human–robot interaction, and fully autonomous navigation. Currently, for wheel-legged biped robots, there are still many unresolved problems, which are extensively discussed in this section, and several meaningful development prospects pertaining to the wheel-legged biped robots are also discussed.

4.1 Existing Problems

4.1.1 The Insufficient Application of New Materials and Rigid-Flexible Coupling

Currently, the existing linkage components of the wheel-legged biped robots exhibit strength or hardness redundancy, insufficient optimization design of the mechanical structure, insufficient consideration of the component material selection, and lack of necessary unity in considering factors such as strength, toughness, density, degree of finish, and price. Traditional materials exhibit shortcomings; for example, although the density of aluminum alloy is small in comparison to that of traditional metal, it is difficult to process complex curved shapes out of aluminum; by contrast, the 3D printing material, which exhibits enhanced plasticity, can easily be processed into complex shapes. The application of the novel materials is insufficient. The commonly utilized carbon fiber materials are not strong enough; furthermore, because the cutting surface is not clean enough, the material pollutes easily. Although polyformaldehyde [27] exhibits light weight and a low surface friction coefficient, its ability to resist the impact of the external environment

Fig. 13 Wheel-legged biped robot system

is poor. Polyethere-therketone is utilized in the assembly of key structural components, namely the robot's body and legs; however, the material is more expensive (i.e., 7–9 times more expensive) than PPS material. In addition, nylon materials are increasingly being utilized, and their most prominent advantage is as follows: they exhibit a higher wear resistance than that of all other fibers. However, their natural aging rate is intensified under field conditions, affecting the overall safety of the robot.

In regard to the mechanical structure design, although some wheel-legged biped robots adopt a symmetrical closed-chain structure, the mechanical strength is enhanced. However, there is a lack of flexible parts similar to the muscle–tendon tissue between the robot drive joints, and the design of the flexible factors pertaining to the mechanical components is insufficient (i.e., the rigid–flexible coupling fusion design is insufficient). The jumping ability of the wheel-legged biped robot reflects the obstacle-crossing performance in an unstructured environment, and the jumping height and jumping distance are largely dependent on the rigid-flexible coupling integrated design. The impact damage and cycle wear between the connecting rod and joint of the pure rigid structure are quite considerable after the robot hits the ground after an aerial maneuver; thus, the life of the mechanical structure is immensely shortened. The pure flexible structure leads to insufficient mechanical stiffness, limited obstacle-crossing ability in complex terrains, and poor load capacity.

4.1.2 Insufficient Breakthrough in Advanced Intelligent Control Methods

The effect of the robot dynamic balance has not yet met the requirements of the practical engineering applications. In a complex unstructured environment, it is difficult to achieve more accurate speed and acceleration control; especially in the execution of the complex tasks, the leg balance effect may be affected. In addition, due to the coupling between the wheel rotation and the extension of the leg linkage mechanism, the multi-variable, nonlinear, strong coupling, and time-varying parameters become the control characteristics of the wheel-legged biped robots; thus, the robot system model is quite complex. Accurate mathematical modeling pertaining to the kinematics and dynamics of the complex models is a crucial method of ensuring stability control, which should ideally combine mathematics, physics, and mechanical theories, and adopt different accurate modeling methods for different types of robot models. Because it is difficult to determine the exact mathematical expression based on the model, the advanced intelligent control methods of the wheel-legged biped robots have not been widely applied in practice. Meanwhile, for conventional control tasks such as DC motor speed regulation, the advanced intelligent control methods are not necessarily superior to traditional methods. Finally, the advanced intelligent control methods require a large number of the calculations, and the micro-control development board installed on the robot platform system cannot easily support the complex advanced intelligent control methods.

4.1.3 The Deficiencies Revealed by the Bionic Jumping Mechanism

In recent years, the dynamic self-balancing control technologies of the wheel-legged biped robots have become relatively mature. However, research on the bio-inspired jumping performance of the legs is still not sufficiently thorough. Robots with jumping capabilities mostly imitate the jumping characteristics of animals or insects, and the bio-inspired jumping principles for the legs of the wheel-legged biped robots are no exception. However, their jumping agility, continuity, diversity with regard to motion space, and jumping ratio (jumping height/robot size or jumping distance/robot size) are difficult to achieve at the level of the biological organisms. This indicates that the research on the jumping mechanism and power regulation of living organisms is not yet sufficiently thorough, and some of the control strategies and cooperative methods adopted in biological jumping have not been comprehensively utilized in the development of the wheel-legged biped robots. Whether using linear or nonlinear springs, it is difficult to completely simulate the elastic driving mechanism of the naturally jumping organisms; thus, the achievement of graceful and flexible jumping motion is challenging. In regard to jumping robots, wheel-legged biped robots have not fully benefited from the latest research achievements, and further inspiration should be derived from the laws pertaining to animal jumping motion and biomimetic jumping robots; thus, the bio-inspired jumping motion performance of the legs can be enhanced.

4.1.4 Insufficient Coordination Ability of Multi-modal Motion

The existence of the wheels enables the robot to achieve rolling motion on smooth surfaces, and the leg linkages can perform bio-inspired jumping actions to overcome obstacles in unstructured environments. The wheel-legged biped robots with the humanoid configuration (as described in Sect. 2.1.1) can also perform tasks such as cooperative grasping, carrying, and sorting. However, with regard to switching between different motion modes, existing wheel-legged biped robots exhibit poor capabilities, and the design of the switching controllers is complex. In reference [17], switching control between wheel-based motion and leg-based walking was achieved; however, intelligent and autonomous wheel-legged switching remains unrealized. Specific manifestations of the insufficient multi-modal motion coordination ability include difficulty in executing jumping motions during dynamic balance (similar to long-distance jumping by an athlete during a run-up), stability issues during grasping tasks in static balance (the Handle robot [18] may experience shaking due to rapid changes in inertial parameters), and challenges in performing front or back flipping motions during motion (which the humanoid robot Atlas [31] can achieve). These limitations lead to a significant gap between the actual performance of the wheel-legged biped robots in practical applications and the expectations for flexible and intelligent application. It hinders their ability to provide autonomous and intelligent services to assist human production and daily life.

4.2 Future Prospects

The main advantages of the wheel-legged biped robots in engineering application and theoretical research include the following: it is suitable for field scenes, multiple motion modes, and complex system modeling. This technology is undergoing a development process, which spans the laboratory research stage to the engineering practical stage. However, the number of existing studies is insufficient (Sect. 4.1). Subsequently, we attempt to predict several future research trends of the wheel-legged biped robots; thus, we expand the wider application.

4.2.1 The Integrated Development of Structure with Rigid–Flexible Coupling

As a typical ground unmanned system, the wheel-legged biped robots exhibit a significant advantage over the traditional wheel-track mobile platform in regard to adaptability to complex terrain, and by realizing the bionic jumping action similar to the jumping robot, they can complete the obstacle-crossing motion. The more common legged robots can enhance the energy and power efficiency through wheeled motion. The rigid–flexible coupling integrated structure is a potential development trend of the robot mechanism design. The design of the structure changes from rigid to rigid–flexible coupling, which exhibits both a rigid support structure and flexible adaptive structure. The rigid–flexible robot structure layout can comprehensively utilize the flexible structure to solve the landing impact problem of the robot jumping motion; thus, the impact damage when it is in contact with the ground can be reduced. In addition, analyzing the mutual conversion and composite of open-chain and closed-chain structures in the process pertaining to the animal and insect motion; integrating the characteristics of the parallel robot mechanism; and designing a novel mechanical structure of the rigid-flexible coupling, series–parallel hybrid, wheel-legged composite is a crucial robot-design development direction. Meanwhile, optimization processes should be considered in both mechanical design and dynamics model, and the utilization of the precision components also contributes to energy efficiency. In the future, researchers should work collaboratively to explore composite materials, structure materials, nanometer materials, and smart materials that meet the following characteristics: light weight, high-strength, optimal stable performance, and high cost-effectiveness; thus, the wheel-legged biped robots will achieve the following characteristics: light weight, advanced intelligence, and high precision.

4.2.2 Promoting Ability to Cross Obstacles by Analyzing the Jumping Mechanism

The complex jumping motion mechanism of the animals or insects should be continually studied, the multi-factor coordination mechanism including muscle–tendon–skeletal–nervous system during motion should be further analyzed, and the novel phenomena and rules at the micro scale should be deeply revealed; thus, humanity will be served more optimally in the future. Drawing inspiration from muscles and tendons in biological tissues and integrating the cellular mechanism concept, a novel multi-configuration elastic driver or a novel bionic drive method containing driving elements and elastic elements is constructed [122, 123]; thus, the motion performance and energy efficiency of the wheel-legged biped robot system is enhanced. Biomimetic jumping is characterized by high energy density, and its complex flexible energy storage-release mechanism, muscle–tendon-tissue coordination mechanism, and multi-limb skeletal coordination mechanism still require further exploration and clarification. In the jumping trajectory planning method associated with the wheel-legged biped robots, the consideration of the nonlinear spring model is emphasized; thus, the impact of contact with the environment is reduced, and collision safety and stability are enhanced. Through in-depth analysis on the bionic jumping mechanism, complete control over the angles, directions, speeds, aerial attitudes, and landing buffering during the jumping process is sought.

4.2.3 Applying the Advanced Intelligent Control Methods

It is necessary to conduct in-depth research on the specific application of the advanced intelligent control methods (e.g., SMC, fuzzy control, adaptive control, neural network control, and RL control) in wheel-legged biped robots. Literature [58] analyzed the balance and trajectory tracking of TWBMR using backstepping SMC; however, subsequent research on SMC is limited and lacks integration with other control strategies. The study conducted by [71] imitated agile motion of the animals through RL strategies. The study introduced a method that trains the neural network strategies in simulations and transfers them to state-of-the-art legged systems; the method was applied to the quadruped robot ANYmal. Other studies that apply RL algorithms to quadruped robots include [117, 124, 125]. Furthermore, [75] proposed an RL-based adaptive optimal control solution, which was the first attempt to utilize the RL strategy in wheel-legged biped robots. In the future, lessons from the successful application of RL in quadruped robots should be comprehensively considered. Therefore, to enhance system stability, the advanced intelligent control algorithms must be employed. The intelligent technologies can also enable robots to autonomously learn new environments and achieve interactive control with other intelligent agents, enhancing the adaptability and robustness of robots in the wild. In addition, to facilitate advanced intelligent control methods, the integration of multi-sensor fusion technology is required; thus, high-precision real-time autonomous navigation, localization, and mapping functions for wheel-legged biped robots in complex environments can be achieved. While researchers continue to overcome the limitations of the advanced intelligent control methods, they must also address a series of issues related to designing core control modules and networks, including strong adaptability, group coordination, quasi-evolution, and interactivity.

4.2.4 Studying Further Multi-modal Motion for Robot

Due to the strict requirements for the adaptability, mobility, and operability of the wheel-legged robots in unstructured environments, and based on the requirements of practical tasks such as disaster relief, military warfare, interstellar exploration, and cargo transportation, researchers should design wheel-legged biped robots with multi-modal motion capabilities. Multi-modal motion offers excellent environmental adaptability and motion flexibility, which is precisely the advantage associated with combining wheeled and legged motion in wheel-legged biped robots. Apart from the classic modes of two-wheeled balancing rolling and legged biomimetic jumping, there is limited research on other motion modes of the wheel-legged biped robots. For instance, the bipedal walking mode has been analyzed in existing studies [16, 17], and upper-limb grasping has been attempted in the Handle robot [18] and robot WLR-II [19]. Researchers can potentially draw inspiration from walking modes for the humanoid robots [80, 126–128], grasping motions of robotic grippers [129–133], as well as motions such as flying [7], skateboarding [118], crawling [125, 134], and running [117, 135]; thus, they can expand the motion modes of the wheel-legged biped robots. By gaining design inspiration from these robot motions, wheel-legged biped robots with multi-functionalities such as walking, rolling, jumping, and climbing can be created; thus, energy efficiency can be maximized, and more agile and diverse motion modes can be achieved. However, this design approach may lead to increased complexity in the robot's mechanical structure and control system, as well as an increase in the robot's mass, which should be considered.

Researchers should actively explore the integration of the rigid-flexible coupling structure, enhance the obstacle-crossing ability exhibited by the bionic jumping motion, apply the advanced intelligent control methods, and deeply analyze the multi-modal motion of the robots. Moreover, they should gradually abandon the traditional research methods of the wheel-legged robots, utilize the advantages of multi-disciplines, and enhance the motion performance. Moreover, they should constantly explore the unique development path and research methods in the field of the wheel-legged biped robots, and promote its development along the novel rigid-flexible coupling, series–parallel hybrid design, multi-motion mode system, and high performance obstacle-crossing direction. Meanwhile, vision and positioning sensors can also be installed on the wheel-legged biped robots to realize real-time perception and the feedback of the surrounding environment and location information, which exhibits a wide range of application prospects in earthquake disaster rescue missions, explosion environment exploration, military battlefield operations, and interstellar exploration. Thus, wheel-legged biped robots exhibit broad application prospects and are expected to increasingly contribute to human production and daily life.

5 Conclusion

The development of the wheel-legged biped robots is reviewed in this paper. First, the research status of the four categories of wheel-legged biped robots is described, and the classic wheel-legged robots are introduced and analyzed. Subsequently, the hardware control and software control are discussed, and several models based on the LSIP, W-SLIP model are analyzed; moreover, the dynamic balance control for two-wheel configurations, the bionic jumping control for legs, and the WBC for integrating the wheels and legs are summarized using LQR, MPC, VMC, fuzzy PID, and WBC control strategies. Finally, it is worth noting that some problems persist between the functional characteristics of the existing wheel-legged biped robots and the flexible application in the practical complex scenarios, and that these problems are mainly occasioned by the lack of structural materials, control strategies, jumping mechanism, and motion diversity. Therefore, researchers should actively learn from the advantages of other categories of robots and animal–insect bionic motions through which wheel-legged biped robots can develop along the direction of novel materials, rigid–flexible coupling, and serial-parallel hybrid design, as well as biomimetic obstacle-crossing with high performance, multi-sensor fusion, advanced intelligent control, and multi-modal technologies. Thus, the robots can actively and crucially facilitate production and daily life.

Funding This work was supported by the Research Fund of State Key Laboratory of Mechanics and Control for Aerospace Structures (1005-IZD23002-25).

Data Availability All data are available in the main text or supplementary materials.

Declarations

Conflict of Interest The authors declare that they have no conflict of interest.

References

1. Hereid, A., Hubicki, C. M., Cousineau, E. A., & Ames, A. D. (2018). Dynamic humanoid locomotion: A scalable formulation for HZD gait optimization. *IEEE Transactions on Robotics, 34*(2), 370–387. https://doi.org/10.1109/TRO.2017.2783371
2. Liu, C., Zhang, T., Liu, M., & Chen, Q. (2020). Active balance control of humanoid locomotion based on foot position compensation. *Journal of Bionic Engineering, 17*(1), 134–147. https://doi.org/10.1007/s42235-020-0011-x
3. Iossaqui, J. G., Camino, J. F., & Zampieri, D. E. (2011). A nonlinear control design for tracked robots with longitudinal

slip. In *Proceedings of the 18th international federation of automatic control (IFAC), Milano, Italy* (Vol. *44*(1), pp. 5932–5937). https://doi.org/10.3182/20110828-6-IT-1002.02648
4. Goldman, D. I., Chen, T. S., Dudek, D. M., & Full, R. J. (2006). Dynamics of rapid vertical climbing in cockroaches reveals a template. *Journal of Experimental Biology, 209*(15), 2990–3000. https://doi.org/10.1242/jeb.02322
5. Yang, Z., Zhu, L., Li, B., Sun, S., Chen, Y., Yan, Y., Liu, Y., & Chen, X. (2016). Mechanical design and analysis of a crawling locomotion enabled by a laminated beam. *Extreme Mechanics Letters, 8*, 88–95. https://doi.org/10.1016/j.eml.2016.03.014
6. Bruzzone, L., & Quaglia, G. (2012). Review article: Locomotion systems for ground mobile robots in unstructured environments. *Mechanical Sciences, 3*(2), 49–62. https://doi.org/10.5194/ms-3-49-2012
7. Sihite, E., Kalantari, A., Nemovi, R., Ramezani, A., & Gharib, M. (2023). Multi-modal mobility morphobot (M4) with appendage repurposing for locomotion plasticity enhancement. *Nature Communications, 14*(1), 3323. https://doi.org/10.1038/s41467-023-39018-y
8. Liu, T., Zhang, C., Song, S., & Meng, M. Q. (2019). Dynamic height balance control for bipedal wheeled robot based on ROS-Gazebo. In *Proceedings of the 2019 IEEE international conference on robotics and biomimetics (ROBIO), Dali, China* (pp. 1875–1880). https://doi.org/10.1109/ROBIO49542.2019.8961739
9. Dario Bellicoso, C., Jenelten, F., Fankhauser, P., Gehring, C., Hwangbo, J., & Hutter, M. (2017). Dynamic locomotion and whole-body control for quadrupedal robots. In *Proceedings of the 2017 IEEE/RSJ international conference on intelligent robots and systems (IROS), Vancouver, BC, Canada* (pp. 3359–3365). https://doi.org/10.1109/IROS.2017.8206174
10. Chen, G., Tu, J., Ti, X., & Hu, H. (2020). A single-legged robot inspired by the jumping mechanism of click beetles and its hopping dynamics analysis. *Journal of Bionic Engineering, 17*(6), 1109–1125. https://doi.org/10.1007/s42235-020-0099-z
11. Khadiv, M., Herzog, A., Moosavian, S., Ali, A., & Righetti, L. (2020). Walking control based on step timing adaptation. *IEEE Transactions on Robotics, 36*(3), 629–643. https://doi.org/10.1109/TRO.2020.2982584
12. Hutter, M., Sommer, H., Gehring, C., Hoepflinger, M., Bloesch, M., & Siegwart, R. (2014). Quadrupedal locomotion using hierarchical operational space control. *The International Journal of Robotics Research, 33*(8), 1047–1062. https://doi.org/10.1177/0278364913519834
13. Klemm, V., Morra, A., Salzmann, C., Tschopp, F., Bodie, K., Gulich, L., Küng, N., Mannhart, D., Pfister, C., Vierneisel, M., Weber, F., Deuber, R., & Siegwart, R. (2019). Ascento: A two-wheeled jumping robot. In *Proceedings of the 2019 international conference on robotics and automation (ICRA), Montreal, Canada* (pp. 7515–7521). https://doi.org/10.1109/ICRA.2019.8793792
14. Raza, F., & Hayashibe, M. (2021). Towards robust wheel-legged biped robot system: Combining feedforward and feedback control. In *Proceedings of the 2021 IEEE/SICE international symposium on system integration (SII), Fukushima, Japan* (pp. 606–612). https://doi.org/10.1109/IEEECONF49454.2021.9382678
15. Guo, F., Wang, S., & Wang, J. (2022). Development status and key technology analysis for motion planning of wheel-legged hybrid mobile robot. *Control and Decision, 37*(06), 1433–1444. https://doi.org/10.13195/j.kzyjc.2021.0052. in Chinese.
16. Xin, S., & Vijayakumar, S. (2020). Online dynamic motion planning and control for wheeled biped robots. In *Proceedings of the 2020 IEEE/RSJ international conference on intelligent robots and systems (IROS), Las Vegas, NV, USA* (pp. 3892–3899). https://doi.org/10.1109/IROS45743.2020.9340967
17. Liu, T., Zhang, C., Wang, J., Song, S., & Meng, M. Q. (2022). Towards terrain adaptability: In situ transformation of wheel-biped robots. *IEEE Robotics and Automation Letters, 7*(2), 3819–3826. https://doi.org/10.1109/LRA.2022.3148486
18. Official website of Boston Dynamics. (2019, March 29). *Handle robot reimagined for logistics*. Retrieved July 10, 2023, from https://www.youtube.com/watch?v=5iV_hB08Uns
19. Li, X., Zhou, H., Zhang, S., Feng, H., & Fu, Y. (2019). WLR-II, a hose-less hydraulic wheel-legged robot. In *Proceedings of the 2019 IEEE/RSJ international conference on intelligent robots and systems (IROS), Macau, China* (pp. 4339–4346). https://doi.org/10.1109/IROS40897.2019.8967935
20. Official website of Boston Dynamics. (2017, February 28). *Introducing handle*. Retrieved July 10, 2023, from https://www.youtube.com/watch?v=-7xvqQeoA8c
21. Chen, H., Wang, B., Hong, Z., Shen, C., Wensing, P. M., & Zhang, W. (2021). Underactuated motion planning and control for jumping with wheeled-bipedal robots. *IEEE Robotics and Automation Letters, 6*(2), 747–754. https://doi.org/10.1109/LRA.2020.3047787
22. Wang, S., Cui, L., Zhang, J., Lai, J., Zhang, D., Chen, K., Zheng, Y., Zhang, Z., & Jiang, Z. (2021). Balance control of a novel wheel-legged robot: Design and experiments. In *Proceedings of the 2021 IEEE international conference on robotics and automation (ICRA), Xi'an, China* (pp 6782–6788). https://doi.org/10.1109/ICRA48506.2021.9561579
23. Jung, T., Lim, J., Bae, H., Lee, K. K., Joe, H. M., & Oh, J. H. (2018). Development of the humanoid disaster response platform DRC-HUBO+. *IEEE Transactions on Robotics, 34*(1), 1–17. https://doi.org/10.1109/TRO.2017.2776287
24. Zhang, C., Liu, T., Song, S., & Meng, M. Q. (2019). System design and balance control of a bipedal leg-wheeled robot. In *Proceedings of the 2019 IEEE international conference on robotics and biomimetics (ROBIO), Dali, China* (pp. 1869–1874). https://doi.org/10.1109/ROBIO49542.2019.8961814
25. Klemm, V., Morra, A., Gulich, L., Mannhart, D., Rohr, D., Kamel, M., Viragh, Y., & Siegwart, R. (2020). LQR-assisted whole-body control of a wheeled bipedal robot with kinematic loops. *IEEE Robotics and Automation Letters, 5*(2), 3745–3752. https://doi.org/10.1109/LRA.2020.2979625
26. Zhang, X., Wang, Q., Huang, S., & Jiang, L. (2022). A multi-model fusion based complex motion control approach for a cheetah-mimicking quadruped robot. *Robot, 44*(06), 682–707. https://doi.org/10.13973/j.cnki.robot.210500. in Chinese.
27. Zhang, C., Zou, W., Ma, L., & Wang, Z. (2020). Biologically inspired jumping robots: A comprehensive review. *Robotics and Autonomous Systems, 124*, 103362. https://doi.org/10.1016/j.robot.2019.103362
28. Hong, C., Tang, D., Quan, Q., Cao, Z., & Deng, Z. (2020). A combined series-elastic actuator and parallel-elastic leg no-latch bio-inspired jumping robot. *Mechanism and Machine Theory, 149*, 103814. https://doi.org/10.1016/j.mechmachtheory.2020.103814
29. Ramos, J., & Kim, S. (2018). Humanoid dynamic synchronization through whole-body bilateral feedback teleoperation. *IEEE Transactions on Robotics, 34*(4), 953–965. https://doi.org/10.1109/TRO.2018.2830387
30. Eiji, N., & Sei, N. (1993). Leg-wheel robot: A futuristic mobile platform for forestry industry. In *Proceedings of 1993 IEEE/Tsukuba international workshop on advanced robotics*,

Tsukuba, Japan (pp. 109–112). https://doi.org/10.1109/ICAR.1993.337208
31. Official website of Boston Dynamics. (2016, February 24). *Atlas, the next generation*. Retrieved July 10, 2023, from https://www.youtube.com/watch?v=rVlhMGQgDkY
32. Muscolo, G. G., Caldwell, D., & Cannella, F. (2017). Biomechanics of human locomotion with constraints to design flexible-wheeled biped robots. In *Proceedings of the 2017 IEEE international conference on advanced intelligent mechatronics (AIM), Munich, Germany* (pp. 1273–1278). https://doi.org/10.1109/AIM.2017.8014193
33. Li, X., Zhou, H., Feng, H., Zhang, S., & Fu, Y. (2018). Design and experiments of a novel hydraulic wheel-legged robot (WLR). In *Proceedings of the 2018 IEEE/RSJ international conference on intelligent robots and systems (IROS), Madrid, Spain* (pp. 3292–3297). https://doi.org/10.1109/IROS.2018.8594484
34. Zhao, L., Yu, Z., Chen, X., Huang, G., Wang, W., Han, L., Qiu, X., Zhang, X., & Huang, Q. (2021). System design and balance control of a novel electrically-driven wheel-legged humanoid robot. In *Proceedings of the 2021 IEEE international conference on unmanned systems (ICUS), Beijing, China* (pp. 742–747). https://doi.org/10.1109/ICUS52573.2021.9641385
35. Official Website of Fraunhofer IML. (2023, April 25). *evoBOT-inventors and developers explain the technology*. Retrieved July 10, 2023, from https://www.iml.fraunhofer.de/evoBOT.html
36. Ji, S. (2021). *Development of robot system and model predictive control for wheeled bipedal robots*. Dissertation, Harbin Institute of Technology (**in Chinese**). https://doi.org/10.27061/d.cnki.ghgdu.2021.003717
37. Cui, Z., Xin, Y., Liu, S., Rong, X., & Li, Y. (2022). Modeling and control of a wheeled biped robot. *Micromachines, 13*(5), 747. https://doi.org/10.3390/mi13050747
38. Chen, S., Rogers, J., Zhang, B., & Sreenath, K. (2019). Feedback control for autonomous riding of hovershoes by a Cassie bipedal robot. In *Proceedings of the 2019 IEEE-RAS 19th international conference on humanoid robots (Humanoids), Toronto, Canada* (pp. 1–8). https://doi.org/10.1109/Humanoids43949.2019.9336618
39. Kollarčík, A. (2021). *Modeling and control of two-legged wheeled robot*. Dissertation, Czech Technical University in Prague. https://gitlab.fel.cvut.cz/kollaada/master-thesis-by-adam-kollarcik
40. Guo, T., Liu, J., Liang, H., Zhang, Y., Chen, W., Xia, X., Wang, M., & Wang, Z. (2022). Design and dynamic analysis of jumping wheel-legged robot in complex terrain environment. *Frontiers in Neurorobotics, 16*, 1066714. https://doi.org/10.3389/fnbot.2022.1066714
41. Official website of IEEE. (2023, May 29). *2023 IEEE international conference on robotics and automation (ICRA)*. Retrieved July 10, 2023, from https://ieeexplore.ieee.org/xpl/conhome/10160211/proceeding
42. Official website of RMU. (2022, September 10). *RoboMaster University Series*. Retrieved July 10, 2023, from https://www.robomaster.com/zh-CN
43. Oreoreo. (2022, May 7). Retrieved July 10, 2023, from https://www.bilibili.com/video/BV1UZ4y1h7u2/?spm_%20id_from=333.999.0.0&vd_source=ab5e3d9d139f8b6dfed3794406fd6ccd
44. Ordinary Rango. (2022, November 16). Retrieved July 10, 2023, from https://www.bilibili.com/video/BV1hD4y147pf/?spm_id_from=333.999.0.0
45. Niiyama, R., Nagakubo, A., & Kuniyoshi, Y. (2007). Mowgli: A bipedal jumping and landing robot with an artificial musculoskeletal system. In *Proceedings of the 2007 IEEE international conference on robotics and automation, Rome, Italy* (pp. 2546–2551). https://doi.org/10.1109/ROBOT.2007.363848
46. Haldane, D. W., Plecnik, M. M., Yim, J. K., & Fearing, R. S. (2016). Robotic vertical jumping agility via series-elastic power modulation. *Science Robotics, 1*(1), 2048. https://doi.org/10.1126/scirobotics.aag2048
47. Pathak, K., Franch, J., & Agrawal, S. K. (2005). Velocity and position control of a wheeled inverted pendulum by partial feedback linearization. *IEEE Transactions on Robotics, 21*(3), 505–513. https://doi.org/10.1109/TRO.2004.840905
48. Cui, R., Guo, J., & Mao, Z. (2015). Adaptive backstepping control of wheeled inverted pendulums models. *Nonlinear Dynamics, 79*(1), 501–511. https://doi.org/10.1007/s11071-014-1682-9
49. Zhang, Y., Zhang, L., Wang, W., Li, Y., & Zhang, Q. (2018). Design and implementation of a two-wheel and hopping robot with a linkage mechanism. *IEEE Access, 6*, 42422–42430. https://doi.org/10.1109/ACCESS.2018.2859840
50. Liu, J., Ruan, X., Lu, M., Weng, H., Wu, D., & Zheng, M. (2023). Motion analysis and stability optimization for metamorphic robot reconfiguration. *Robotica, 41*(4), 1179–1202. https://doi.org/10.1017/S0263574722001618
51. Liu, J., Yan, Z., Lu, M., Zhang, L., Cui, T., Zheng, M., & Wu, D. (2022). Stability analysis and design of an unmanned deformable vehicle during coupled reconfiguration motion. *Institution of Mechanical Engineers, Part K: Journal of Multi-body Dynamics, 236*(4), 639–659. https://doi.org/10.1177/14644193221125543
52. He, Y., Li, Y., Wu, J., Liu, X., & Yao, Y. (2019). Design and mobility analysis of a multi-mode two-wheel mobile robot. *Journal of Mechanical Engineering, 55*(23), 83–92. https://doi.org/10.3901/JME.2019.23.083. in Chinese.
53. Liu, K., Gao, H., Ji, H., & Hao, Z. (2020). Adaptive sliding mode based disturbance attenuation tracking control for wheeled mobile robots. *International Journal of Control, Automation and Systems, 18*(5), 1288–1298. https://doi.org/10.1007/s12555-019-0262-7
54. Xie, C., Fan, Y., & Qiu, J. (2020). Event-based tracking control for nonholonomic mobile robots. *Nonlinear Analysis: Hybrid Systems, 38*, 100945. https://doi.org/10.1016/j.nahs.2020.100945
55. Xin, L., Wang, Q., She, J., & Li, Y. (2016). Robust adaptive tracking control of wheeled mobile robot. *Robotics and Autonomous Systems, 78*, 36–48. https://doi.org/10.1016/j.robot.2016.01.002
56. Asif, M., Khan, M. J., & Cai, N. (2014). Adaptive sliding mode dynamic controller with integrator in the loop for nonholonomic wheeled mobile robot trajectory tracking. *International Journal of Control, 87*(5), 964–975. https://doi.org/10.1080/00207179.2013.862597
57. Chen, C. Y., Li, T. S., Yeh, Y. C., & Chang, C. C. (2009). Design and implementation of an adaptive sliding-mode dynamic controller for wheeled mobile robots. *Mechatronics, 19*(2), 156–166. https://doi.org/10.1016/j.mechatronics.2008.09.004
58. Esmaeili, N., Alfi, A., & Khosravi, H. (2017). Balancing and trajectory tracking of two-wheeled mobile robot using backstepping sliding mode control: Design and experiments. *Journal of Intelligent and Robotic Systems, 87*(3–4), 601–613. https://doi.org/10.1007/s10846-017-0486-9
59. Xin, Y., Chai, H., Li, Y., Rong, X., Li, B., & Li, Y. (2019). Speed and acceleration control for a two wheel-leg robot based on distributed dynamic model and whole-body control. *IEEE Access, 7*, 180630–180639. https://doi.org/10.1109/ACCESS.2019.2959333
60. Zambella, G., Lentini, G., Garabini, M., Grioli, G., Catalano, M. G., Palleschi, A., & Caporale, D. (2019). Dynamic whole-body control of unstable wheeled humanoid robots. *IEEE Robotics and Automation Letters, 4*(4), 3489–3496. https://doi.org/10.1109/LRA.2019.2927961
61. Zhang, X., Zhang, Y., Sun, H., Jia, Q., & Xiao, H. (2014). Design and dynamics analysis of a two-wheel robot with hopping ability.

Robot, *36*(03), 355–361 (**in Chinese**) https://robot.sia.cn/cn/article/id/3671
62. Özlük, Y., & Aydin, E. A. (2023). Fuzzy logic control of a head-movement based semi-autonomous human–machine interface. *Journal of Bionic Engineering, 20*, 645–655. https://doi.org/10.1007/s42235-022-00272-3
63. Wan, Y., Qiu, Z., Hong, Y., Wang, Y., Zhang, J., Liu, Q., Wu, Z., & Guo, C. (2018). A highly sensitive flexible capacitive tactile sensor with sparse and high-aspect-ratio microstructures. *Advanced Electronic Materials, 4*(4), 1700586. https://doi.org/10.1002/aelm.201700586
64. Guo, Y., Guo, Z., Zhong, M., Wan, P., Zhang, W., & Zhang, L. (2018). A flexible wearable pressure sensor with bioinspired microcrack and interlocking for full-range human-machine interfacing. *Small (Weinheim an der Bergstrasse, Germany), 14*(44), 1803018. https://doi.org/10.1002/smll.201803018
65. Liu, Y., Shi, X., Liu, S., Li, H., Zhang, H., Wang, C., Liang, J., & Chen, Y. (2019). Biomimetic printable nanocomposite for healable, ultrasensitive, stretchable and ultradurable strain sensor. *Nano Energy, 63*, 103898. https://doi.org/10.1016/j.nanoen.2019.103898
66. Ye, X., Li, Y., Zhang, Y., & Wang, P. (2022). A comprehensive review: Recent developments of biomimetic sensors. *Journal of Bionic Engineering, 19*(4), 853–876. https://doi.org/10.1007/s42235-022-00181-5
67. Bian, Z., & Wang, X. (2023). *Control algorithms for quadruped robots: Modeling, control, and practice*. China Machine Press.
68. Kenneally, G., De, A., & Koditschek, D. E. (2016). Design principles for a family of direct-drive legged robots. *IEEE Robotics and Automation Letters, 1*(2), 900–907. https://doi.org/10.1109/LRA.2016.2528294
69. Seok, S., Wang, A., Meng Yee Chuah, Otten, D., Lang, J., & Kim, S. (2013). Design principles for highly efficient quadrupeds and implementation on the MIT Cheetah robot. In *Proceedings of the 2013 IEEE international conference on robotics and automation (ICRA), Karlsruhe, Germany* (pp. 3307–3312). https://doi.org/10.1109/ICRA.2013.6631038
70. Zhang, X. (2021). *Mechanism design and control of bionic elastic actuated joint based on multi-configuration*. Dissertation, University of Electronic Science and Technology of China (**in Chinese**). https://doi.org/10.27005/d.cnki.gdzku.2021.002815
71. Hwangbo, J., Lee, J., Dosovitskiy, A., Bellicoso, D., Tsounis, V., Koltun, V., & Hutter, M. (2019). Learning agile and dynamic motor skills for legged robots. *Science Robotics, 4*(26), 5872. https://doi.org/10.1126/scirobotics.aau5872
72. Medeiros, V. S., Jelavic, E., Bjelonic, M., Siegwart, R., Meggiolaro, M. A., & Hutter, M. (2020). Trajectory optimization for wheeled-legged quadrupedal robots driving in challenging terrain. *IEEE Robotics and Automation Letters, 5*(3), 4172–4179. https://doi.org/10.1109/LRA.2020.2990720
73. Yue, M., An, C., & Sun, J. Z. (2018). An efficient model predictive control for trajectory tracking of wheeled inverted pendulum vehicles with various physical constraints. *International Journal of Control, Automation and Systems, 16*(1), 265–274. https://doi.org/10.1007/s12555-016-0393-z
74. Albert, K., Phogat, K. S., Anhalt, F., Banavar, R. N., Chatterjee, D., & Lohmann, B. (2020). Structure-preserving constrained optimal trajectory planning of a wheeled inverted pendulum. *IEEE Transactions on Robotics, 36*(3), 910–923. https://doi.org/10.1109/TRO.2020.2985579
75. Cui, L., Wang, S., Zhang, J., Zhang, D., Lai, J., Zheng, Y., Zhang, Z., & Jiang, Z. P. (2021). Learning-based balance control of wheel-legged robots. *IEEE Robotics and Automation Letters, 6*(4), 7667–7674. https://doi.org/10.1109/LRA.2021.3100269
76. Yu, H., Gao, H., & Deng, Z. (2021). Toward a unified approximate analytical representation for spatially running spring-loaded inverted pendulum model. *IEEE Transactions on Robotics, 37*(2), 691–698. https://doi.org/10.1109/TRO.2020.2976304
77. Zhou, H., Li, X., Feng, H., Li, J., Zhang, S., & Fu, Y. (2019). Model decoupling and control of the wheeled humanoid robot moving in sagittal plane. In *Proceedings of the 2019 IEEE-RAS 19th international conference on humanoid robots (Humanoids), Toronto, Canada* (pp. 359–364). https://doi.org/10.1109/Humanoids43949.2019.9035069
78. Herdt, A., Diedam, H., Wieber, P. B., Dimitrov, D., Mombaur, K., & Diehl, M. (2010). Online walking motion generation with automatic footstep placement. *Advanced Robotics, 24*(5–6), 719–737. https://doi.org/10.1163/016918610X493552
79. Scianca, N., De Simone, D., Lanari, L., & Oriolo, G. (2020). MPC for humanoid gait generation: Stability and feasibility. *IEEE Transactions on Robotics, 36*(4), 1171–1188. https://doi.org/10.1109/TRO.2019.2958483
80. Park, B., & Park, J. (2023). Heel-strike and toe-off walking of humanoid robot using quadratic programming considering the foot contact states. *Robotics and Autonomous Systems, 163*, 104396. https://doi.org/10.1016/j.robot.2023.104396
81. Xin, S., Orsolino, R., & Tsagarakis, N. (2019). Online relative footstep optimization for legged robots dynamic walking using discrete-time model predictive control. In *Proceedings of the 2019 IEEE/RSJ international conference on intelligent robots and systems (IROS), Macau, China* (pp. 513–520). https://doi.org/10.1109/IROS40897.2019.8968028
82. Yarza, A., Santibanez, V., & Moreno-Valenzuela, J. (2011). Global asymptotic stability of the classical PID controller by considering saturation effects in industrial robots. *International Journal of Advanced Robotic Systems, 8*(4), 36. https://doi.org/10.5772/45688
83. Salinas, A., Moreno-Valenzuela, J., & Kelly, R. (2016). A family of nonlinear PID-like regulators for a class of torque-driven robot manipulators equipped with torque-constrained actuators. *Advances in Mechanical Engineering, 8*(2), 1–14. https://doi.org/10.1177/1687814016628492
84. Sun, X., Hashimoto, K., Hayashi, S., Okawara, M., Mastuzawa, T., & Takanishi, A. (2021). Stable vertical ladder climbing with rung recognition for a four-limbed robot. *Journal of Bionic Engineering, 18*(4), 786–798. https://doi.org/10.1007/s42235-021-0058-3
85. Stilman, M., Wang, J., Teeyapan, K., & Marceau, R. (2009). Optimized control strategies for wheeled humanoids and mobile manipulators. In *Proceedings of the 2009 9th IEEE-RAS international conference on humanoid robots, Paris, France* (pp. 568–573). https://doi.org/10.1109/ICHR.2009.5379514
86. Ugurlu, B., & Kawamura, A. (2010). ZMP-based online jumping pattern generation for a one-legged robot. *IEEE Transactions on Industrial Electronics, 57*(5), 1701–1709. https://doi.org/10.1109/TIE.2009.2032439
87. Zhang, J., Song, G., Li, Y., Qiao, G., Song, A., & Wang, A. (2013). A bio-inspired jumping robot: Modeling, simulation, design, and experimental results. *Mechatronics, 23*(8), 1123–1140. https://doi.org/10.1016/j.mechatronics.2013.09.005
88. Kovac, M., Fuchs, M., Guignard, A., Zufferey, J. C., & Floreano, D. (2008). A miniature 7g jumping robot. In *Proceedings of the 2008 IEEE international conference on robotics and automation (ICRA), Pasadena, CA, USA,* 373–378. https://doi.org/10.1109/ROBOT.2008.4543236
89. Zaitsev, V., Gvirsman, O., Ben Hanan, U., Weiss, A., Ayali, A., & Kosa, G. (2015). A locust-inspired miniature jumping robot. *Bioinspiration and Biomimetics, 10*(6), 066012. https://doi.org/10.1088/1748-3190/10/6/066012
90. Han, L., Wang, Z., Ji, A., & Dai, Z. (2013). The mechanics and trajectory control in locust jumping. *Journal of Bionic*

Engineering, 10(2), 194–200. https://doi.org/10.1016/S1672-6529(13)60215-2
91. Noh, M., Kim, S. W., An, S., Koh, J. S., & Cho, K. J. (2012). Flea-inspired catapult mechanism for miniature jumping robots. *IEEE Transactions on Robotics, 28*(5), 1007–1018. https://doi.org/10.1109/TRO.2012.2198510
92. Jung, G. P., Choi, H. C., & Cho, K. J. (2017). The effect of leg compliance in multi-directional jumping of a flea-inspired mechanism. *Bioinspiration and Biomimetics, 12*(2), 026006. https://doi.org/10.1088/1748-3190/aa575a
93. Clemente, C. J., & Richards, C. (2013). Muscle function and hydrodynamics limit power and speed in swimming frogs. *Nature Communications, 4*(1), 2737. https://doi.org/10.1038/ncomms3737
94. Graichen, K., Hentzelt, S., Hildebrandt, A., Kärcher, N., Gaißert, N., & Knubben, E. (2015). Control design for a bionic kangaroo. *Control Engineering Practice, 42*, 106–117. https://doi.org/10.1016/j.conengprac.2015.05.005
95. Chen, T., Sun, X., Xu, Z., Li, Y., Rong, X., & Zhou, L. (2019). A trot and flying trot control method for quadruped robot based on optimal foot force distribution. *Journal of Bionic Engineering, 16*(4), 621–632. https://doi.org/10.1007/s42235-019-0050-3
96. Nguyen, Q. V., & Park, H. C. (2012). Design and demonstration of a locust-like jumping mechanism for small-scale robots. *Journal of Bionic Engineering, 9*(3), 271–281. https://doi.org/10.1016/S1672-6529(11)60121-2
97. Han, B., Luo, X., Liu, Q., Zhou, B., & Chen, X. (2014). Hybrid control for SLIP-based robots running on unknown rough terrain. *Robotica, 32*(7), 1065–1080. https://doi.org/10.1017/S0263574713001239
98. Mathis, F. B., & Mukherjee, R. (2016). Apex height control of a two-mass robot hopping on a rigid foundation. *Mechanism and Machine Theory, 105*, 44–57. https://doi.org/10.1016/j.mechmachtheory.2016.06.014
99. Gao, J., Jin, H., Zhu, Y., Gao, L., Lv, H., Zhao, J., & Cai, H. (2023). Research on jumping algorithm of wheel-legged self-balancing robot based on nonlinear spring model. *Journal of Mechanical Engineering, 59*(09), 51–62. in Chinese.
100. Zhao, D., & Revzen, S. (2020). Multi-legged steering and slipping with low DoF hexapod robots. *Bioinspiration and Biomimetics, 15*(4), 045001. https://doi.org/10.1088/1748-3190/ab84c0
101. Chen, Z., Lu, J., Deng, P., Guo, Y., & Li, Y. (2020). Design and attitude control of a stable jumping robot. *Journal of Mechanical Engineering, 56*(23), 34–44. https://doi.org/10.3901/JME.2020.23.034. (in Chinese).
102. Xin, Y., Li, Y., Chai, H., Rong, X., & Li, B. (2023). Research on jumping method of two wheeled-leg robot based on whole-body torque control. *Acta Automatica Sinica, 49*(8), 1635–1644. https://doi.org/10.16383/j.aas.c200486. (in Chinese).
103. Misu, K., Yoshii, A., & Mochiyama, H. (2018). A compact wheeled robot that can jump while rolling. In *Proceedings of the 2018 IEEE/RSJ international conference on intelligent robots and systems (IROS), Madrid, Spain* (pp. 7507–7512). https://doi.org/10.1109/IROS.2018.8593895
104. Chen, Z., Lu, J., Deng, P., Guo, Y., & Li, Y. (2020). Design of balanced wheeled jumping robot based on the motion mechanism of springtail. *Journal of Mechanical Engineering, 56*(17), 20–28. https://doi.org/10.3901/JME.2020.17.020. (in Chinese).
105. Nakamura, Y., Hanafusa, H., & Yoshikawa, T. (1987). Task-priority based redundancy control of robot manipulators. *The International Journal of Robotics Research, 6*(2), 3–15. https://doi.org/10.1177/027836498700600201
106. Khatib, O., Sentis, L., Park, J., & Warren, J. (2004). Whole-body dynamic behavior and control of human-like robots. *International Journal of Humanoid Robotics, 01*(01), 29–43. https://doi.org/10.1142/S0219843604000058
107. Dietrich, A., Bussmann, K., Petit, F., Kotyczka, P., Ott, C., Lohmann, B., & Albu-Schäffer, A. (2016). Whole-body impedance control of wheeled mobile manipulators: Stability analysis and experiments on the humanoid robot Rollin' Justin. *Autonomous Robots, 40*(3), 505–517. https://doi.org/10.1007/s10514-015-9438-z
108. Dietrich, A., Ott, C., & Albu-Schäffer, A. (2015). An overview of null space projections for redundant, torque-controlled robots. *The International Journal of Robotics Research, 34*(11), 1385–1400. https://doi.org/10.1177/0278364914566516
109. Sentis, L., & Khatib, O. (2005). Synthesis of whole-body behaviors through hierarchical control of behavioral primitives. *International Journal of Humanoid Robotics, 02*(04), 505–518. https://doi.org/10.1142/S0219843605000594
110. Dario Bellicoso, C., Gehring, C., Hwangbo, J., Fankhauser, P., & Hutter, M. (2016). Perception-less terrain adaptation through whole body control and hierarchical optimization. In *Proceedings of the 2016 IEEE-RAS 16th international conference on humanoid robots (Humanoids), Cancun, Mexico* (pp. 558–564). https://doi.org/10.1109/HUMANOIDS.2016.7803330
111. Xin, Y., Rong, X., Li, Y., Li, B., & Chai, H. (2019). Movements and balance control of a wheel-leg robot based on uncertainty and disturbance estimation method. *IEEE Access, 7*, 133265–133273. https://doi.org/10.1109/ACCESS.2019.2940487
112. Sleiman, J. P., Farshidian, F., Minniti, M. V., & Hutter, M. (2021). A unified MPC framework for whole-body dynamic locomotion and manipulation. *IEEE Robotics and Automation Letters, 6*(3), 4688–4695. https://doi.org/10.1109/LRA.2021.3068908
113. Ahn, J. K., & Jung, S. (2014). Development of a two-wheel mobile manipulator: Balancing and interaction control. *Robotica, 32*(7), 1135–1152. https://doi.org/10.1017/S026357471300129X
114. Xu, J. X., Guo, Z. Q., & Lee, T. H. (2013). Design and implementation of a Takagi-Sugeno-type fuzzy logic controller on a two-wheeled mobile robot. *IEEE Transactions on Industrial Electronics, 60*(12), 5717–5728. https://doi.org/10.1109/TIE.2012.2230600
115. Bjelonic, M., Bellicoso, C. D., De Viragh, Y., Sako, D., Tresoldi, F. D., Jenelten, F., & Hutter, M. (2019). Keep Rollin'—whole-body motion control and planning for wheeled quadrupedal robots. *IEEE Robotics and Automation Letters, 4*(2), 2116–2123. https://doi.org/10.1109/LRA.2019.2899750
116. Bjelonic, M., Sankar, P. K., Bellicoso, C. D., Vallery, H., & Hutter, M. (2020). Rolling in the deep–hybrid locomotion for wheeled-legged robots using online trajectory optimization. *IEEE Robotics and Automation Letters, 5*(2), 3626–3633. https://doi.org/10.1109/LRA.2020.2979661
117. Jin, Y., Liu, X., Shao, Y., Wang, H., & Yang, W. (2022). High-speed quadrupedal locomotion by imitation-relaxation reinforcement learning. *Nature Machine Intelligence, 4*(12), 1198–1208. https://doi.org/10.1038/s42256-022-00576-3
118. Kim, K., Spieler, P., Lupu, E. S., Ramezani, A., & Chung, S. J. (2021). A bipedal walking robot that can fly, slackline, and skateboard. *Science Robotics, 6*(59), 1–14. https://doi.org/10.1126/scirobotics.abf8136
119. Xiong, X., & Ames, A. (2022). 3-D underactuated bipedal walking via H-LIP based gait synthesis and stepping stabilization. *IEEE Transactions on Robotics, 38*(4), 2405–2425. https://doi.org/10.1109/TRO.2022.3150219
120. Wang, W., Ji, A., Manoonpong, P., Shen, H., Hu, J., Dai, Z., & Yu, Z. (2018). Lateral undulation of the flexible spine of sprawling posture vertebrates. *Journal of Comparative Physiology A, 204*(8), 707–719. https://doi.org/10.1007/s00359-018-1275-z
121. Zhang, Z., Chen, D., Chen, K., & Chen, H. (2016). Analysis and comparison of two jumping leg models for bioinspired locust

robot. *Journal of Bionic Engineering, 13*(4), 558–571. https://doi.org/10.1016/S1672-6529(16)60328-1
122. Chen, R., Yuan, Z., Guo, J., Bai, L., Zhu, X., Liu, F., Pu, H., Xin, L., Peng, Y., Luo, J., Wen, L., & Sun, Y. (2021). Legless soft robots capable of rapid, continuous, and steered jumping. *Nature Communications, 12*(1), 7028. https://doi.org/10.1038/s41467-021-27265-w
123. Qiu, J., Ji, A., Zhu, K., Han, Q., Wang, W., Qi, Q., & Chen, G. (2023). A gecko-inspired robot with a flexible spine driven by shape memory alloy springs. *Soft Robotics, 10*(4), 713–723. https://doi.org/10.1089/soro.2022.0080
124. Kim, Y. K., Seol, W., & Park, J. (2021). Biomimetic quadruped robot with a spinal joint and optimal spinal motion via reinforcement learning. *Journal of Bionic Engineering, 18*(6), 1280–1290. https://doi.org/10.1007/s42235-021-00104-w
125. Wu, J., Xin, G., Qi, C., & Xue, Y. (2023). Learning robust and agile legged locomotion using adversarial motion priors. *IEEE Robotics and Automation Letters, 8*(8), 4975–4982. https://doi.org/10.1109/LRA.2023.3290509
126. Singh, B., Vijayvargiya, A., & Kumar, R. (2022). Kinematic modeling for biped robot gait trajectory using machine learning techniques. *Journal of Bionic Engineering, 19*(2), 355–369. https://doi.org/10.1007/s42235-021-00142-4
127. Lee, Y., Lee, H., Lee, J., & Park, J. (2022). Toward reactive walking: Control of biped robots exploiting an event-based FSM. *IEEE Transactions on Robotics, 38*(2), 683–698. https://doi.org/10.1109/TRO.2021.3088062
128. Rosa, N., & Lynch, K. M. (2022). A topological approach to gait generation for biped robots. *IEEE Transactions on Robotics, 38*(2), 699–718. https://doi.org/10.1109/TRO.2021.3094159
129. Zhang, C., Lin, C., Leng, Y., Fu, Z., Cheng, Y., & Fu, C. (2023). An effective head-based HRI for 6D robotic grasping using mixed reality. *IEEE Robotics and Automation Letters, 8*(5), 2796–2803. https://doi.org/10.1109/LRA.2023.3261701
130. Zhang, Z., Long, Y., Chen, G., Wu, Q., Wang, H., & Jiang, H. (2023). Soft and lightweight fabric enables powerful and high-range pneumatic actuation. *Science Advances, 9*(15), 1–15. https://doi.org/10.1126/sciadv.adg1203
131. Liu, F., Sun, F., Fang, B., Li, X., Sun, S., & Liu, H. (2023). Hybrid robotic grasping with a soft multimodal gripper and a deep multistage learning scheme. *IEEE Transactions on Robotics, 39*(3), 2379–2399. https://doi.org/10.1109/TRO.2023.3238910
132. Fang, B., Xia, Z., Sun, F., Yang, Y., Liu, H., & Fang, C. (2023). Soft magnetic fingertip with particle-jamming structure for tactile perception and grasping. *IEEE Transactions on Industrial Electronics, 70*(6), 6027–6035. https://doi.org/10.1109/TIE.2022.3201305
133. Cai, Y., & Yuan, S. (2023). In-hand manipulation in power grasp: Design of an adaptive robot hand with active surfaces. In *Proceedings of the 2023 IEEE international conference on robotics and automation (ICRA), London, UK,* 10296–10302. https://doi.org/10.1109/ICRA48891.2023.10161516
134. Ze, Q., Wu, S., Nishikawa, J., Dai, J., Sun, Y., Leanza, S., Zemelka, C., Novelino, L. S., Paulino, G. H., & Zhao, R. R. (2022). Soft robotic origami crawler. *Science Advances, 8*(13), 1–9. https://doi.org/10.1126/sciadv.abm7834
135. Park, H. W., Wensing, P. M., & Kim, S. (2021). Jumping over obstacles with MIT Cheetah 2. *Robotics and Autonomous Systems, 136*, 103703. https://doi.org/10.1016/j.robot.2020.103703

Springer Nature or its licensor (e.g. a society or other partner) holds exclusive rights to this article under a publishing agreement with the author(s) or other rightsholder(s); author self-archiving of the accepted manuscript version of this article is solely governed by the terms of such publishing agreement and applicable law.